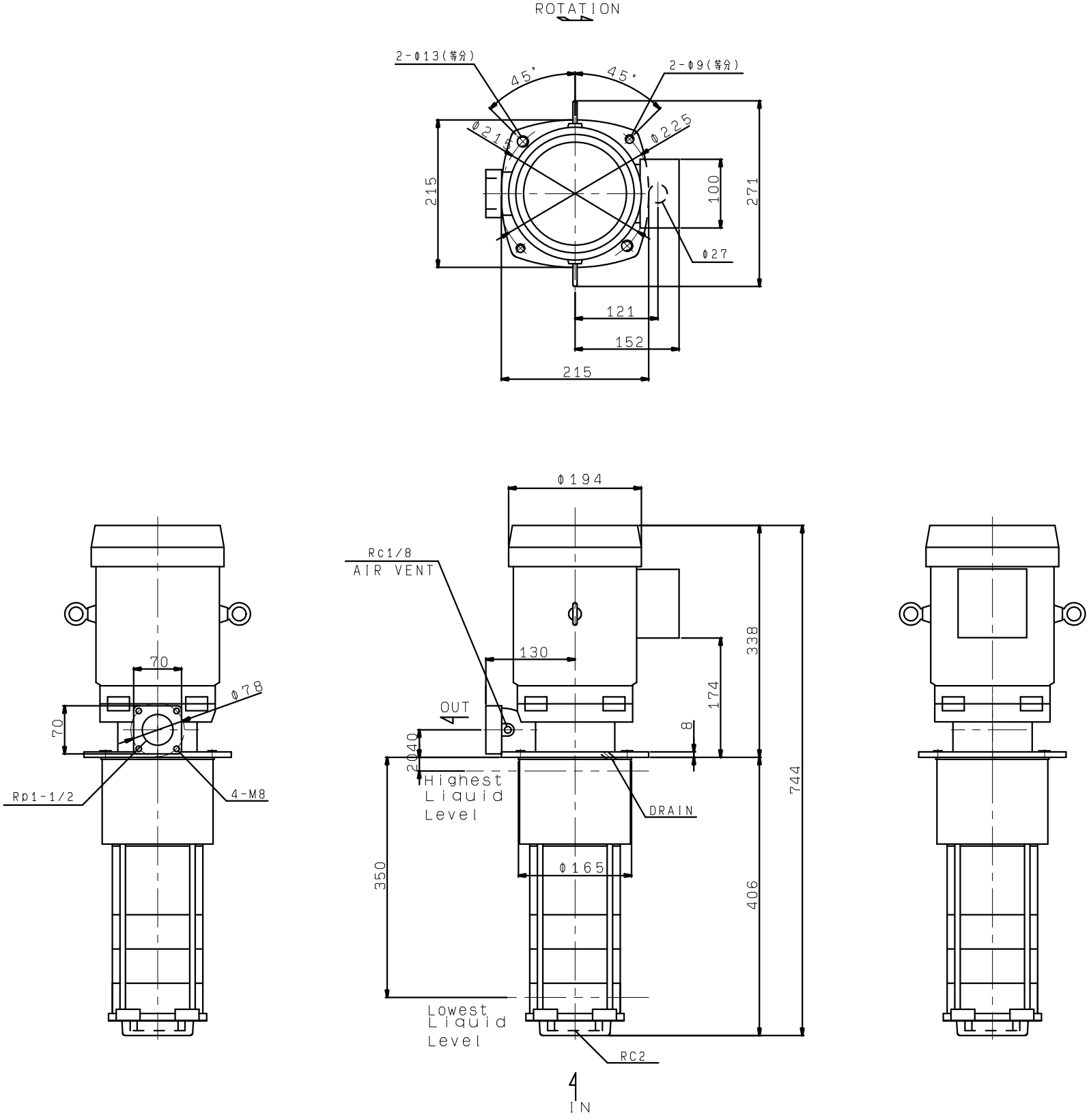RCD-40B2.2
RCD-40B2.2T4
VC82