RCA-60

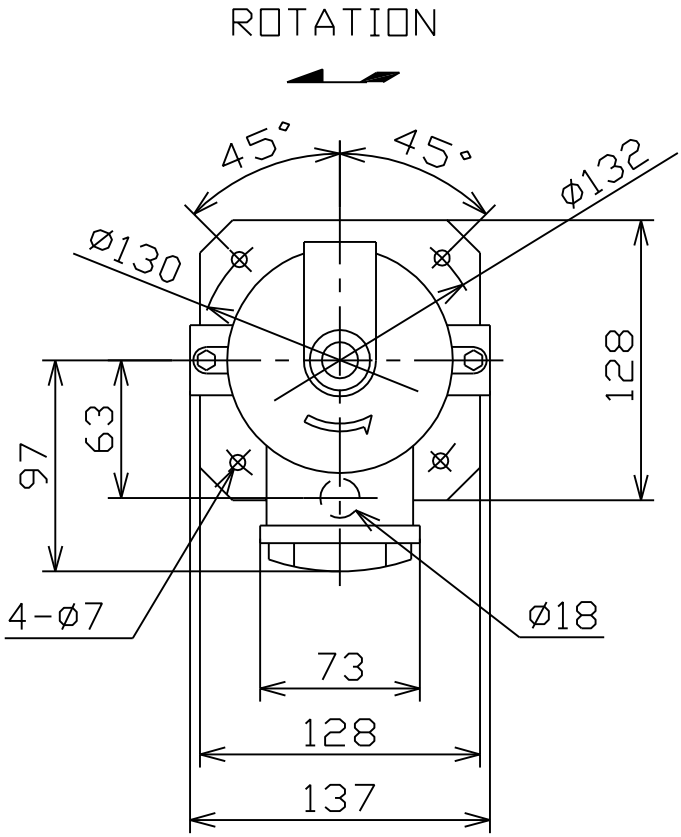
ROTATION
45°
45°
ø132
ø130
128
63
97
4-ø7
ø18
73
128
137

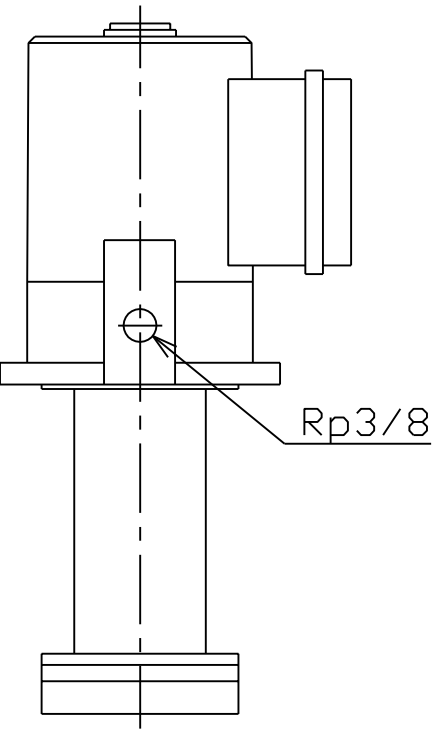
Rp3/8

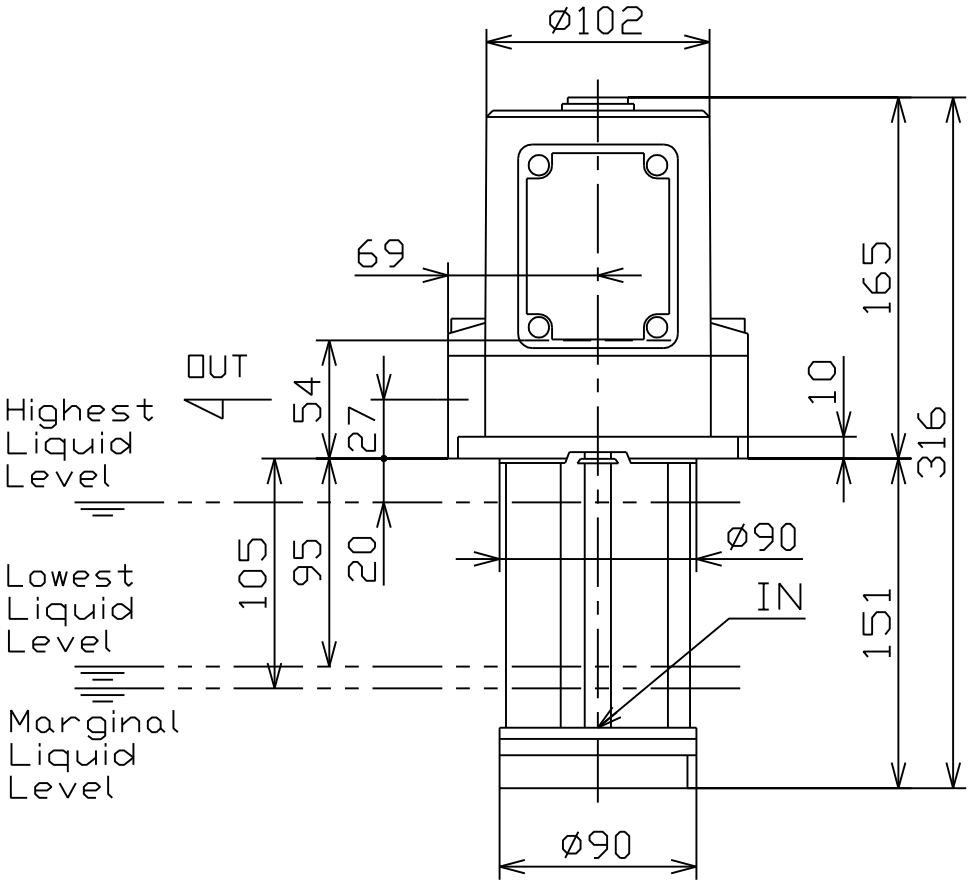
ø102
69
165
OUT
54
27
10
316
Highest
Liquid
Level
105
95
20
ø90
Lowest
Liquid
Level
IN
151
Marginal
Liquid
Level
ø90