RCA-100

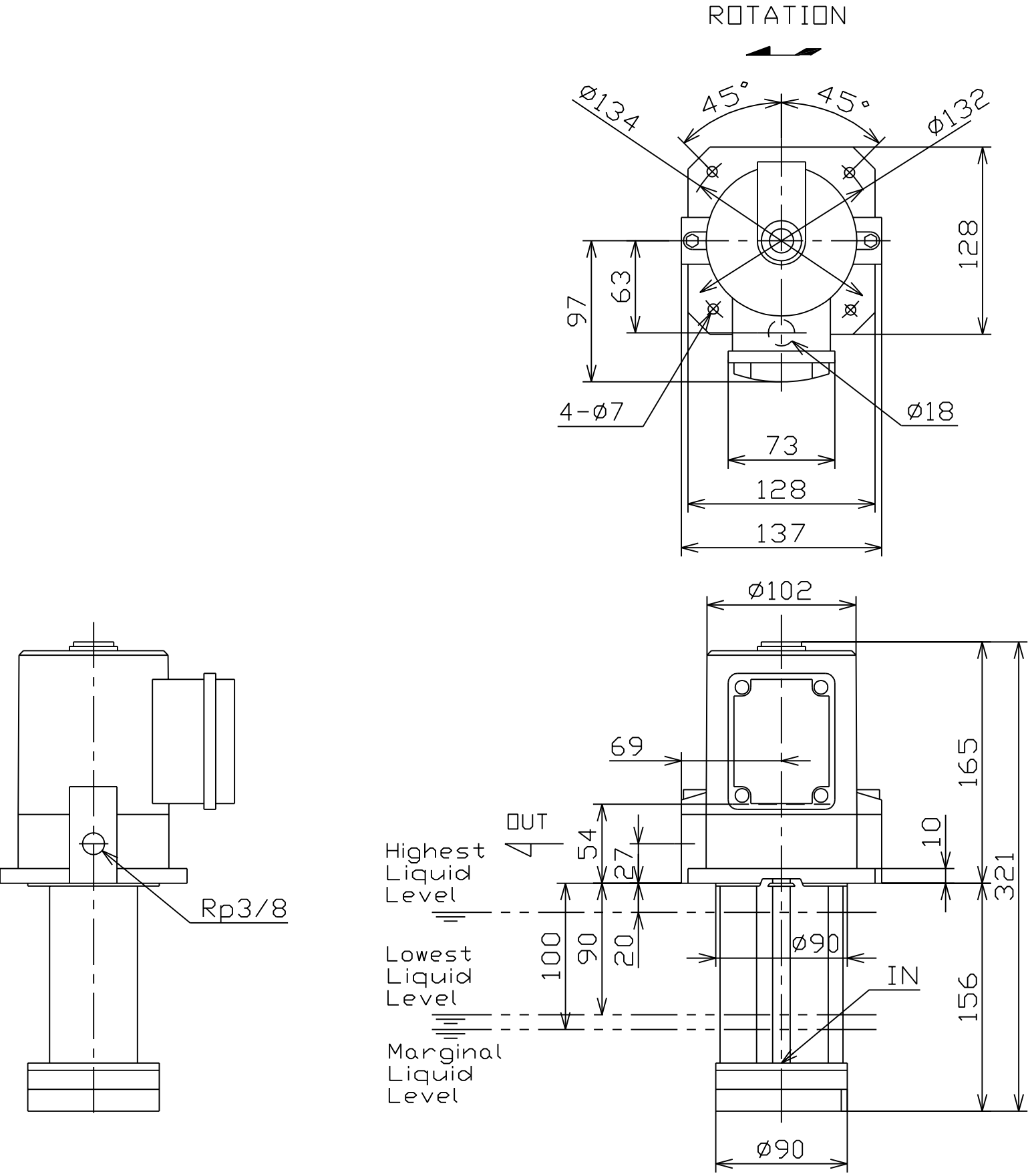
ROTATION
Ø134
45°
45°
Ø132
128
63
97
4-Ø7
Ø18
73
128
137
Ø102
69
165
OUT
54
27
10
321
Highest
Liquid
Level
Rp3/8
100
90
20
Ø90
Lowest
Liquid
Level
IN
156
Marginal
Liquid
Level
Ø90