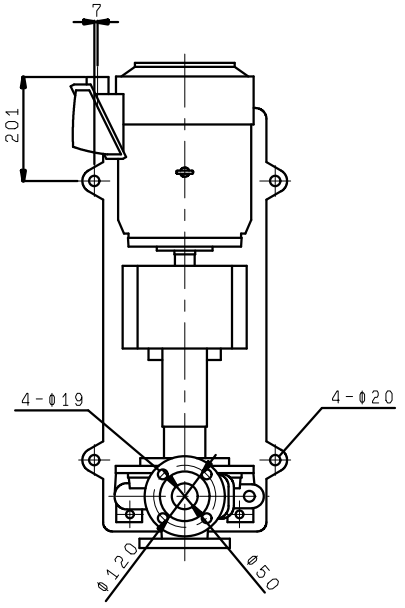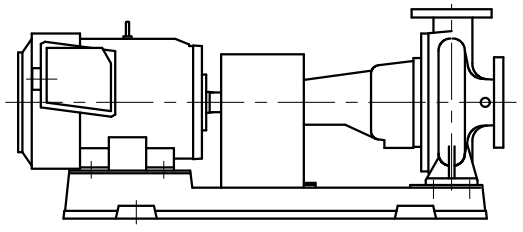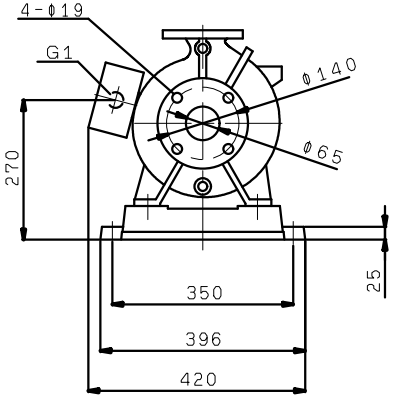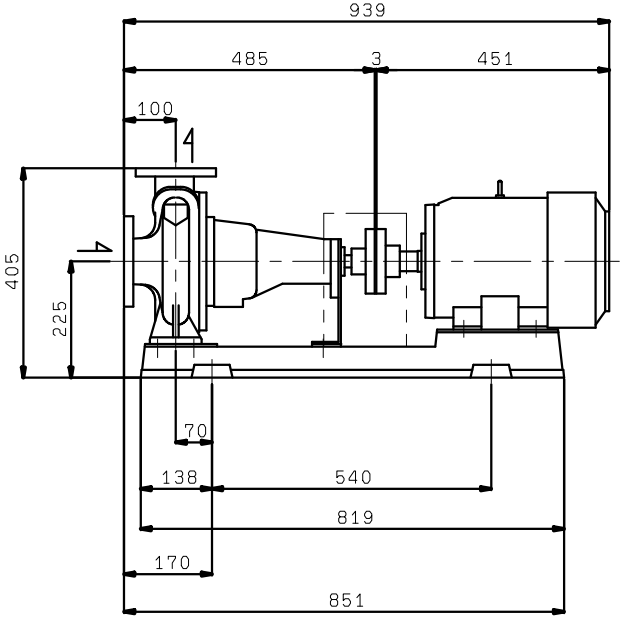GDK655M2ME5.5
GDK655M2ME7.5
GDK656M2ME7.5
(VC30)