KAWAMOTO PUMP

Comfort Earth®

Stainless steel deep well submersible pump

SANRONG®

US2 type

Strong against sand | Tough & Long life | High performance

PAT.

Ver. 1.5

SANRONG SAND+STRONG Collecting Kawamoto Pump's unique technology!!

That's why SANRONG is tough against sand!

Superior sand prevent performance with unique structure!!

① Rubber seal wearing

While pump running, it is possible to pump up water due to interspace sealed by rubber wearing which is being pushed by inner pressure. Whereas, while pump stop, it is possible to remove sand due to interspace opened by rubber wearing which is being released from inner pressure. It also can prevent locking by the sand at the starting.

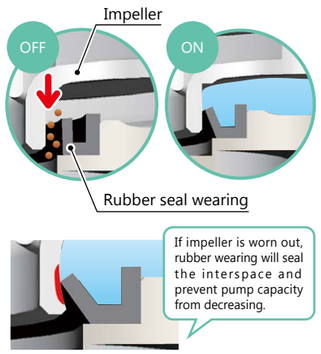

② Polygonal Bush

Smooth lubrication brought by different inner pressure distribution with polygonal bush makes it possible to prevent sand from biting.

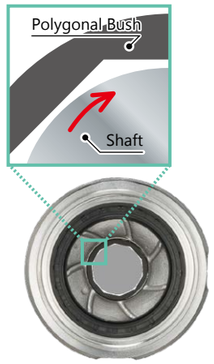

③ Bearing structure

A foreign material interfusion preventing structure designed on both upside and downside of the bearing prevents worn out and biting by sand.

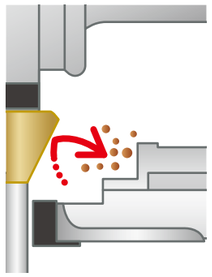

④ Sealing Structure

Closed contact searing structure makes it possible to prevent leaking from stage casings with O ring.

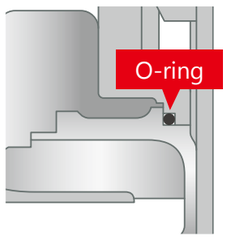

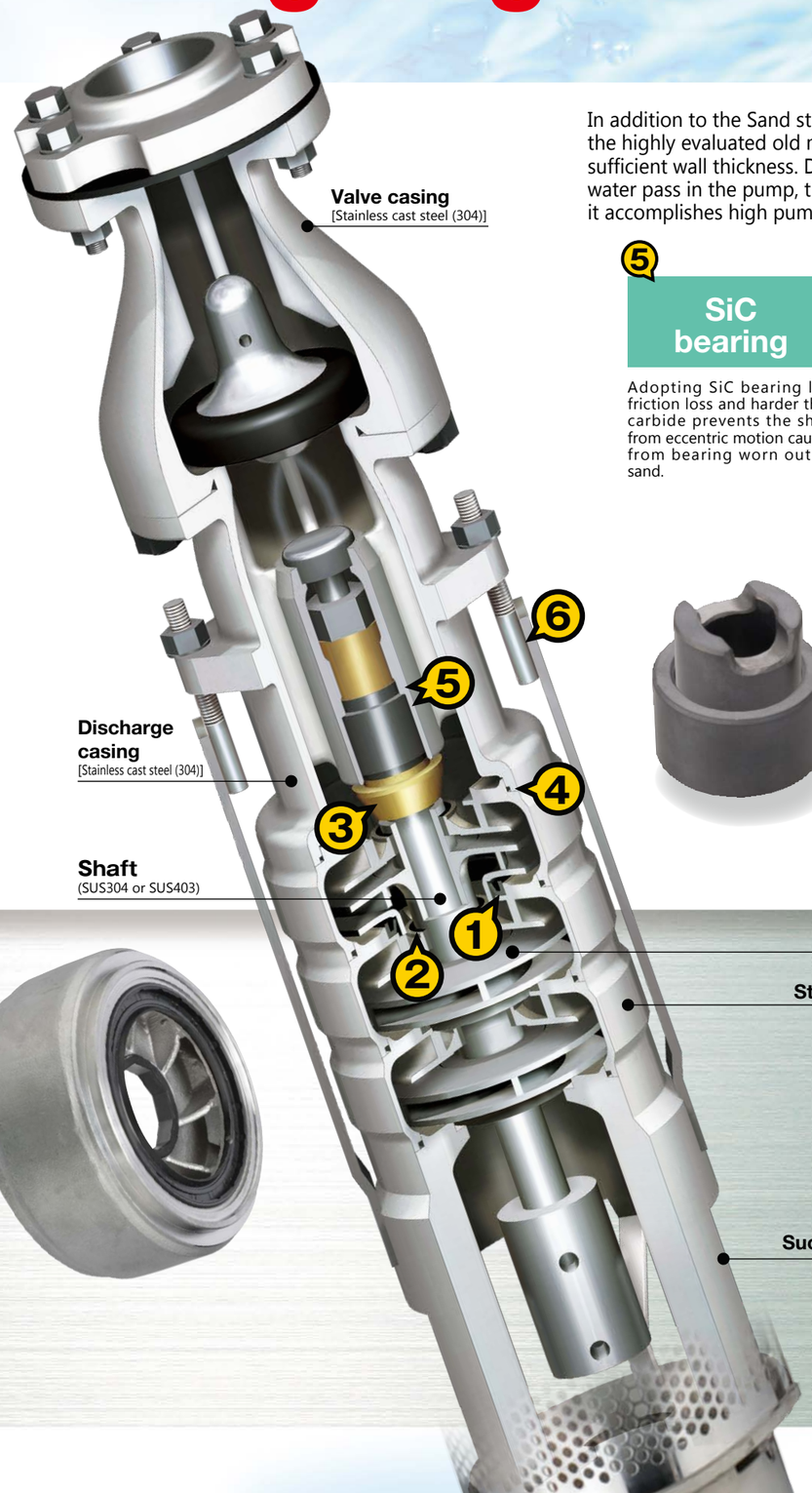

In addition to the Sand strong structure inherited from the highly evaluated old model, adopting impeller with sufficient wall thickness. Due to the smooth surface of water pass in the pump, the friction loss is very low, and it accomplishes high pump performance.

⑤ SiC bearing

Adopting SiC bearing low friction loss and harder than carbide prevents the shaft from eccentric motion caused from bearing worn out by sand.

⑥ Band structure

Band structure doesn't put bending stress on band as well as high resistance to corrosion and toughness.

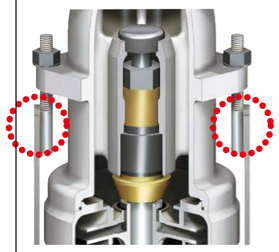

Always clean, Heavy-duty and Long life!!

Major parts are made from precision cast stainless steel, so strong against rust and corrosion, and clean.
In addition to that, due to high durability brought from combination with stainless steel motor, US2 can sure provide a clean water supply for a long time stably.

Stainless Cast Steel precision casting

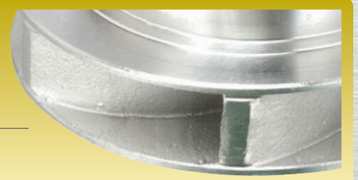

What's precision casting? Casting method which can mold complicated shapes with exact dimensional accuracy, moreover, casting surface is extremely smooth.

Adopting Stainless Cast Steel impeller with sufficient wall thickness

Note) The figure is image.

SANRONG
SAND+STRONG

It assures for long-time stable water supply.

Application Pump up from deep well

etc...

Standard specifications

Application	Well bore	100～300mm
Liquid	Liquid quality	Clean water (Hydrogen ion concentration : pH5.8~8.6 Chloride content : 200mg/L or less Sand content : 50mg/L or less (Fine sand0.1~0.25mm or less))
	Liquid temperature	0 ~ 30 ℃ (0 ~ 35 ℃ in 3.7kW or less) (no freezing)
Material	Impeller	Cast Stainless Steel (304)
	Shaft	SUS304 or SUS403
	Casing	Stainless cast steel (304) (US2-$\frac{25}{32}$: stage casing SUS304 with resin)
	Bearing	SiC × SiC
Motor	Type	Encapsulated submersible motor
	Power supply	Three phase 200/200/220, 50/60/60 (0.75~45kW) 380/400/415/380/400/440, 50/50/50/60/60/60 (0.75~55kW) Voltage fluctuation: within ±10% of rated voltage
	Max. submerged depth	1.5kW or less: 70m, 1.9kW or more: 150m
	Speed	50Hz: 3,000min^{-1}, 60Hz: 3,600min^{-1}
	Start-up method	Direct line (7.5kW or less) 人-Δ (11kW or more)

※In the case installing into the well having larger bore size than the size in specification list, insufficient motor cooling may cause motor burn. Install the pump to have cooling flow speed become more than 0.1m/s.

Special specification | ●Cable extension 40~80m, 100m (US2-$\frac{25}{32}$ and USN2-40/50 only)

Standard accessories

Motor cable	5m
Cable support band	For US2-25/32, UNS2-40/50
Vinyl tape	For US2-40~150, USN2-80
Flange & flange packing	For 150mm well (except for USN2-80) ※For 100mm well: Thread in type, for 200mm well: Optional accessory

Optional accessory

Well cover unit	Stainless steel
Valve set	※
Control panel	ECA3, ECA$^{W}_{D}$3, ECAJ3, ECASN3 type
Water level gage	Pressure type water level gauge with Control unit
Compound gauge	————
Sole pate	Application well bore: 200, 250, 300 mm
Stainless welding flange	USN2-80 for 150~300mm well, USN2-80~150, for SDT-SN80, SDT-S100 well cover
Column pipe	Stainless steel/Nylon coating/SGPW

※Component of valve set	
Sluice valve	1
Check valve	1
Packing and Bolt	1 set
Gauge mounting accessory	1 set

Model name designation

US(N)2-255(B)-0.75C

①Model name ②Bore (mm) ③Frequency (5: 50Hz, 6: 60Hz) ④B：Lager capacity type
⑤Motor output (kW)

Installation example

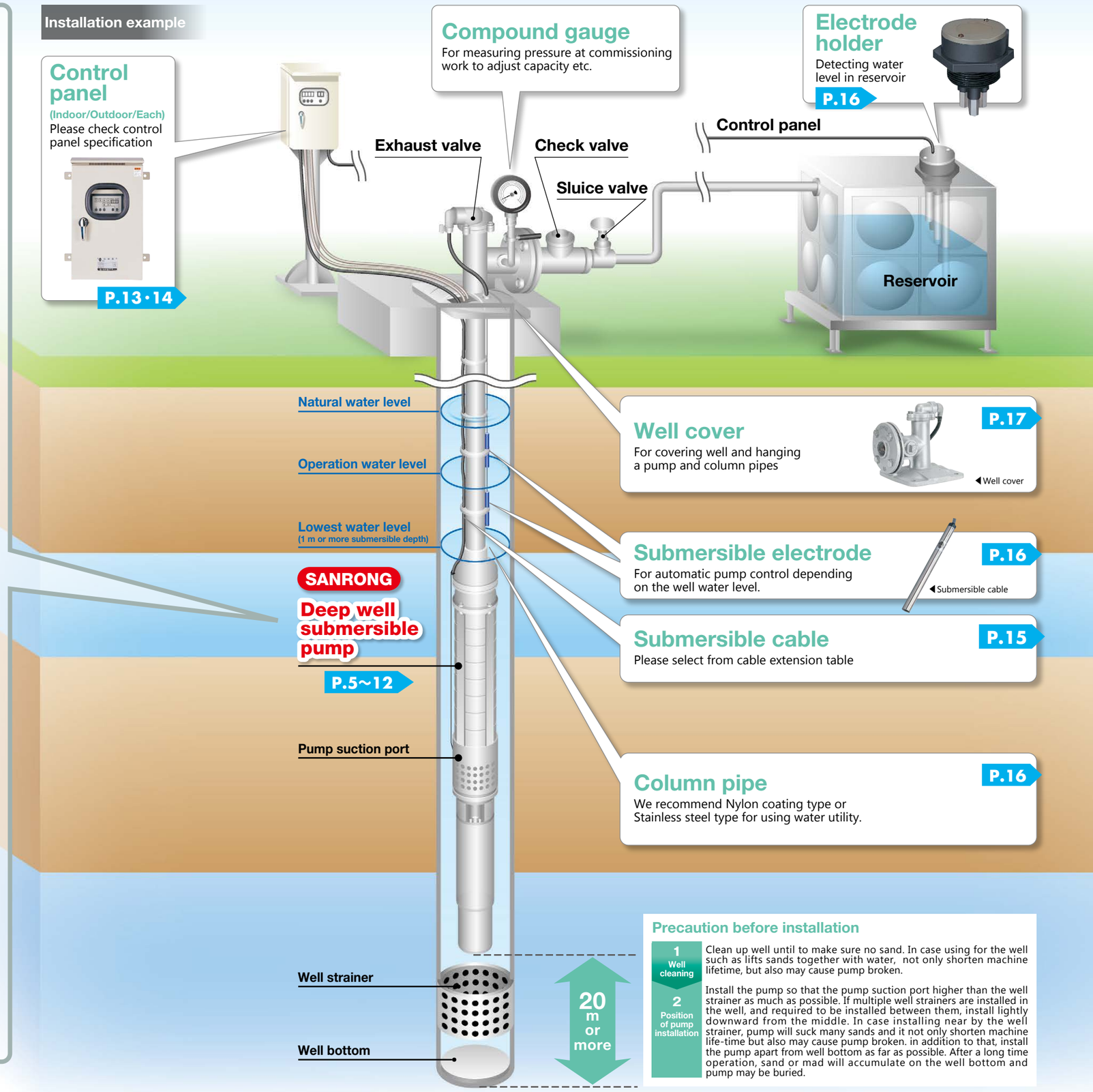

Precaution before installation

1 Well cleaning
Clean up well until to make sure no sand. In case using for the well such as lifts sands together with water, not only shorten machine lifetime, but also may cause pump broken.

2 Position of pump installation
Install the pump so that the pump suction port higher than the well strainer as much as possible. If multiple well strainers are installed in the well, and required to be installed between them, install lightly downward from the middle. In case installing near by the well strainer, pump will suck many sands and it not only shorten machine life-time but also may cause pump broken. in addition to that, install the pump apart from well bottom as far as possible. After a long time operation, sand or mad will accumulate on the well bottom and pump may be buried.

50Hz Min. well bore 100mm

Outline dimension table

Inquire specification sheets and drawings before actual work planing

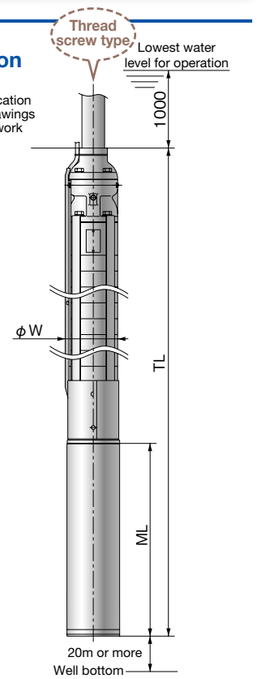

Selection chart

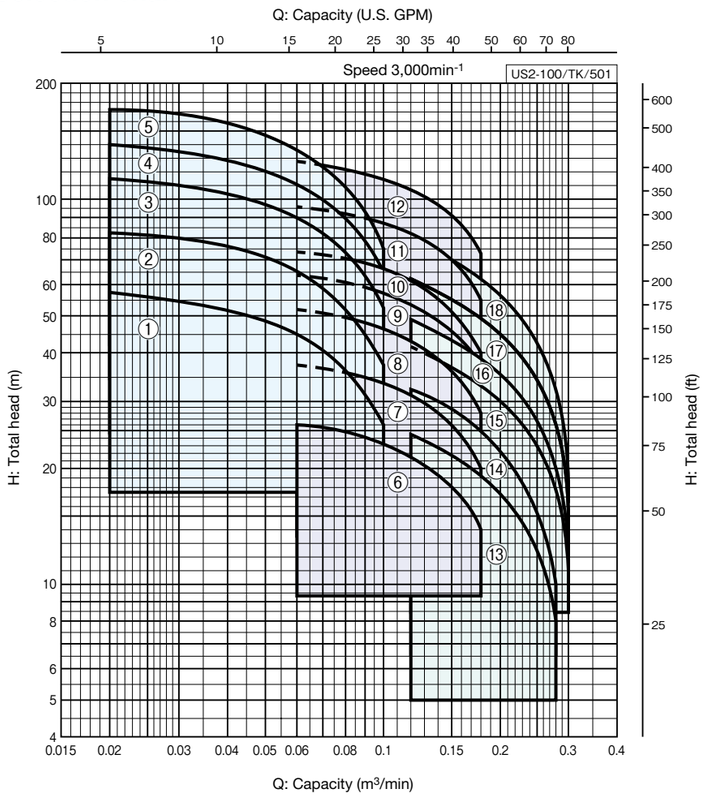

Specification & Dimension table

* Except for cable mass

Bore mm	Ref	Model	Motor kW	Motor hp	No. of stage	Standard specifications Q m³/min	Standard specifications H m	Standard specifications Q m³/min	Standard specifications H m	Dimensions (mm) ML	Dimensions (mm) TL	Dimensions (mm) W	Mass* kg	Application well cover
25・32	①	US2-255/325-0.75C	0.75	1	11	0.02	57	0.1	26	298	928	98	19	SDT-S25・32
	②	US2-255/325-1.1C	1.1	1.5	16	0.02	83	0.1	38	298	1096	98	22	
	③	US2-255/325-1.5C	1.5	2	22	0.02	114	0.1	51	346	1312	98	25	
	④	US2-255/325-1.9CR	1.9	2.5	27	0.02	140	0.1	65	389	1495	98	27	
	⑤	US2-255/325-2.2CR	2.2	3	34	0.02	173	0.1	75	389	1691	98	30	
40	⑥	USN2-405-0.75C	0.75	1	5	0.06	26	0.18	14	298	856	97	17	SDT-SN40
	⑦	USN2-405-1.1C	1.1	1.5	7	0.06	37	0.18	20	298	940	97	21	
	⑧	USN2-405-1.5C	1.5	2	10	0.06	52	0.18	28	346	1114	97	24	
	⑨	USN2-405-1.9CR	1.9	2.5	12	0.06	64	0.18	37	389	1269	97	27	
	⑩	USN2-405-2.2CR	2.2	3	14	0.06	74	0.18	40	389	1353	97	29	
	⑪	USN2-405-2.7C	2.7	3.5	18	0.06	97	0.18	55	589	1722	97	42	
	⑫	USN2-405-3.7C	3.7	5	24	0.06	127	0.18	72	589	1973	97	48	
50	⑬	USN2-505-1.1C	1.1	1.5	6	0.12	24.5	0.28	7.5	298	955	97	19	SDT-SN50
	⑭	USN2-505-1.5C	1.5	2	8	0.12	32.5	0.28	9	346	1101	97	23	
	⑮	USN2-505-1.9CR	1.9	2.5	10	0.12	42	0.3	9	389	1270	97	26	
	⑯	USN2-505-2.2CR	2.2	3	12	0.12	49	0.3	10.5	389	1368	97	28	
	⑰	USN2-505-2.7C	2.7	3.5	15	0.12	63	0.3	14	589	1715	97	40	
	⑱	USN2-505-3.7C	3.7	5	20	0.12	80	0.3	18	589	1960	97	46	

Large capacity types are also available in 25mm models. Please inquire the detail

60Hz Min. well bore 100mm

Outline dimension table

Inquire specification sheets and drawings before actual work planing

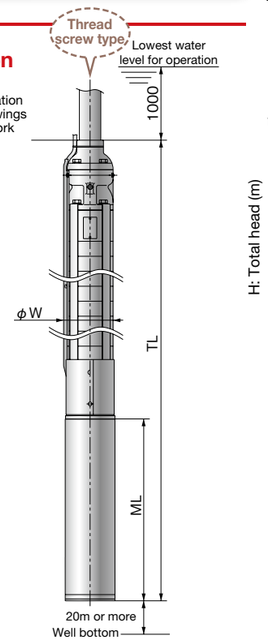

Selection chart

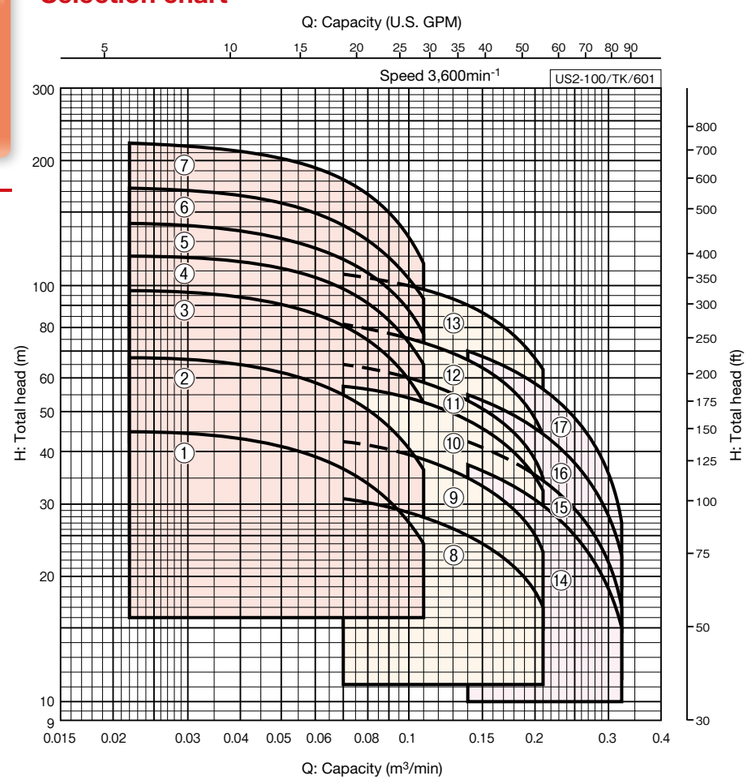

Specification & Dimension table

* Except for cable mass

Bore mm	Ref	Model	Motor kW	Motor hp	No. of stage	Standard specifications Q m³/min	Standard specifications H m	Standard specifications Q m³/min	Standard specifications H m	Dimensions (mm) ML	Dimensions (mm) TL	Dimensions (mm) W	Mass* kg	Application well cover
25・32	①	US2-256/326-0.75C	0.75	1	6	0.022	45	0.11	24	298	788	98	17	SDT-S25・32
	②	US2-256/326-1.1C	1.1	1.5	9	0.022	68	0.11	36	298	872	98	18	
	③	US2-256/326-1.5C	1.5	2	13	0.022	98	0.11	52	346	1032	98	21	
	④	US2-256/326-1.9CR	1.9	2.5	16	0.022	120	0.11	64	389	1187	98	23	
	⑤	US2-256/326-2.2CR	2.2	3	19	0.022	143	0.11	76	389	1271	98	24	
	⑥	US2-256/326-2.7C	2.7	3.5	23	0.022	173	0.11	92	589	1581	98	35	
	⑦	US2-256/326-3.7C	3.7	5	30	0.022	222	0.11	114	589	1581	98	38	
40	⑧	USN2-406-1.1C	1.1	1.5	4	0.07	31	0.21	17	298	814	97	17	SDT-SN40
	⑨	USN2-406-1.5C	1.5	2	6	0.07	43	0.21	23	346	946	97	20	
	⑩	USN2-406-1.9CR	1.9	2.5	8	0.07	59	0.21	32	389	1073	97	22	
	⑪	USN2-406-2.2CR	2.2	3	9	0.07	65	0.21	35	389	1115	97	23	
	⑫	USN2-406-2.7C	2.7	3.5	11	0.07	81	0.21	44	589	1427	97	35	
	⑬	USN2-406-3.7C	3.7	5	14	0.07	108	0.21	63	589	1553	97	38	
50	⑭	USN2-506-1.9CR	1.9	2.5	6	0.14	37	0.32	15	389	1046	97	21	SDT-SN50
	⑮	USN2-506-2.2CR	2.2	3	7	0.14	42	0.32	17	389	1095	97	22	
	⑯	USN2-506-2.7C	2.7	3.5	9	0.14	55	0.32	22.5	589	1421	97	33	
	⑰	USN2-506-3.7C	3.7	5	12	0.14	70	0.32	27	589	1568	97	36	

Large capacity types are also available in 25mm models. Please inquire the detail

50Hz Min. well bore 150mm

Outline dimension table

Inquire specification sheets and drawings before actual work planing

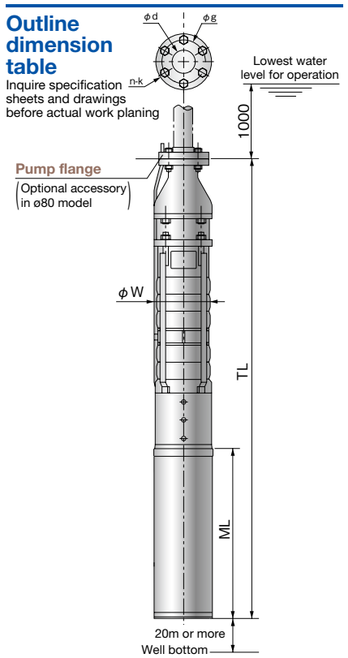

Selection chart

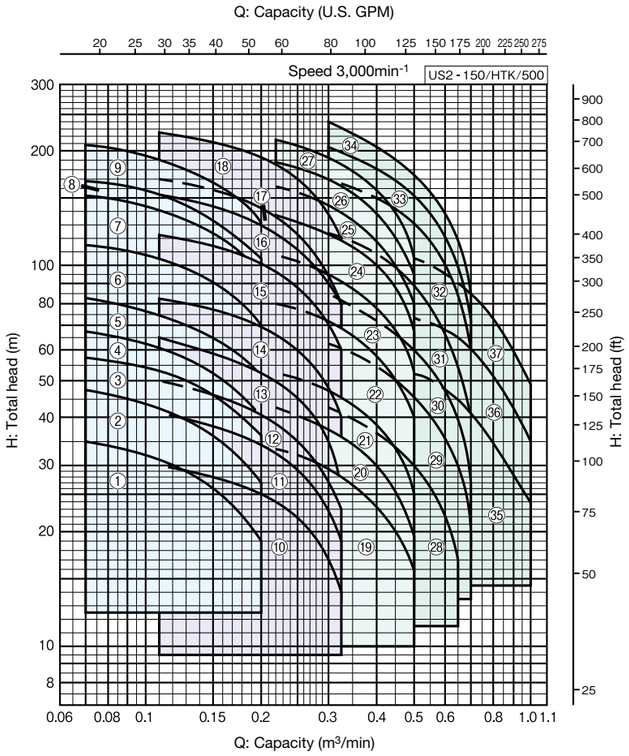

Specification & Dimension table

* Except for cable mass

Bore	Ref	Model	Motor		No. of stage	Standard specifications				Dimensions (mm)			Flange combination dimensions				Mass*	Application well cover
						Q	H	Q	H									
mm			kW	hp		m³/min	m	m³/min	m	ML	TL	W	d	g	n	k	kg	
40	①	US2-405-1.1C	1.1	1.5	4	0.07	35	0.2	19	298	880	140	40	90	6	M10	30	SDT-S40
	②	US2-405-1.5C	1.5	2	5	0.07	47	0.2	27.5	346	968	140	40	90	6	M10	33	
	③	US2-405-1.9CR	1.9	2.5	6	0.07	58	0.2	36	389	1051	140	40	90	6	M10	35	
	④	US2-405-2.2CR	2.2	3	7	0.07	67	0.2	40	389	1091	140	40	90	6	M10	37	
	⑤	US2-405-2.7C	2.7	3.5	9	0.07	83	0.2	52	589	1371	140	40	90	6	M10	48	
	⑥	US2-405-3.7C	3.7	5	12	0.07	115	0.2	70	589	1491	140	40	90	6	M10	53	
	⑦	US2-405L-5.5C	5.5	7.5	15	0.07	152	0.2	98	543	1615	141	40	90	6	M10	77	
	⑧	US2-405-5.5C	5.5	7.5	18	0.07	168	0.2	104	543	1735	141	40	90	6	M10	82	
	⑨	US2-405-7.5C	7.5	10	21	0.07	207	0.2	132	603	1915	141	40	90	6	M10	96	
50	⑩	US2-505-1.5C	1.5	2	3	0.11	30	0.32	14	346	898	140	50	100	6	M10	31	SDT-S50
	⑪	US2-505-1.9CR	1.9	2.5	4	0.11	40.5	0.32	19.5	389	981	140	50	100	6	M10	32	
	⑫	US2-505-2.2CR	2.2	3	5	0.11	50	0.32	23	389	1021	140	50	100	6	M10	34	
	⑬	US2-505-2.7C	2.7	3.5	7	0.11	65	0.32	25	589	1301	140	50	100	6	M10	45	
	⑭	US2-505-3.7C	3.7	5	8	0.11	82	0.32	40	589	1341	140	50	100	6	M10	47	
	⑮	US2-505-5.5C	5.5	7.5	12	0.11	122	0.32	60	543	1465	141	50	100	6	M10	71	
	⑯	US2-505L-7.5C	7.5	10	15	0.11	152	0.32	73	603	1685	141	50	100	6	M10	87	
	⑰	US2-505-7.5C	7.5	10	18	0.11	170	0.32	75	603	1805	141	50	100	6	M10	92	
	⑱	US2-505-11C	11	15	22	0.11	225	0.32	115	733	2095	142	50	100	6	M10	121	
65	⑲	US2-655-2.2CR	2.2	3	4	0.22	33	0.5	15	389	1031	140	65	115	8	M10	34	SDT-S65
	⑳	US2-655-2.7C	2.7	3.5	5	0.22	43	0.5	19	589	1281	140	65	115	8	M10	44	
	㉑	US2-655-3.7C	3.7	5	6	0.22	52	0.5	25	589	1331	140	65	115	8	M10	47	
	㉒	US2-655-5.5C	5.5	7.5	9	0.22	80	0.5	39	543	1445	141	65	115	8	M10	70	
	㉓	US2-655-7.5C	7.5	10	12	0.22	107	0.5	52	603	1655	141	65	115	8	M10	87	
	㉔	US2-655L-11C	11	15	15	0.22	138	0.5	68	733	1985	142	65	115	8	M10	108	
	㉕	US2-655-11C	11	15	18	0.22	162	0.5	80	733	2135	142	65	115	8	M10	113	
	㉖	US2-655L-15C	15	20	21	0.22	188	0.5	95	818	2370	142	65	115	8	M10	126	
	㉗	US2-655-15C	15	20	24	0.22	215	0.5	105	818	2520	142	65	115	8	M10	131	
80	㉘	USN2-805-3.7C	3.7	5	5	0.3	42	0.65	17	590	1282	140	80	118	8	M10	47	SDT-SN80
	㉙	USN2-805-5.5C	5.5	7.5	7	0.3	62	0.7	20	543	1345	141	80	118	8	M10	68	
	㉚	USN2-805-7.5C	7.5	10	10	0.3	84	0.7	26	603	1555	141	80	118	8	M10	80	
	㉛	USN2-805-11C	11	15	14	0.3	122	0.7	40	733	1935	142	80	118	8	M10	106	
	㉜	USN2-805-15C	15	20	19	0.3	170	0.7	62	818	2270	142	80	118	8	M10	122	
	㉝	USN2-805-18C	18.5	25	24	0.3	205	0.7	73	890	2592	142	80	118	8	M10	140	
	㉞	USN2-805-22C	22	30	27	0.3	237	0.7	82	970	2822	142	80	118	8	M10	163	
	㉟	USN2-805B-7.5C	7.5	10	5	0.5	52	1.0	24	603	1593	142	80	118	8	M10	96	
	㊱	USN2-805B-11C	11	15	7	0.5	74	1.0	35	733	1963	142	80	118	8	M10	126	
	㊲	USN2-805B-15C	15	20	10	0.5	105	1.0	49	818	2408	142	80	118	8	M10	157	

60Hz Min. well bore 150mm

Outline dimension table

Inquire specification sheets and drawings before actual work planing

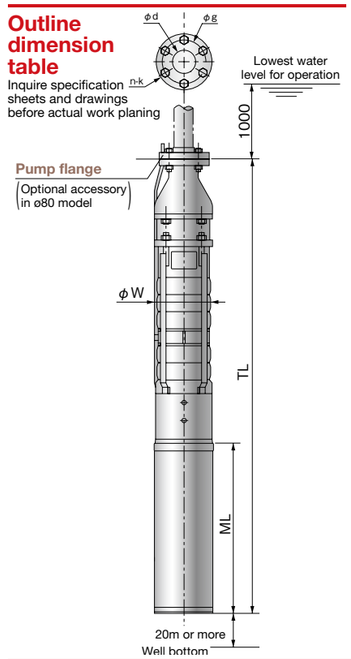

Selection chart

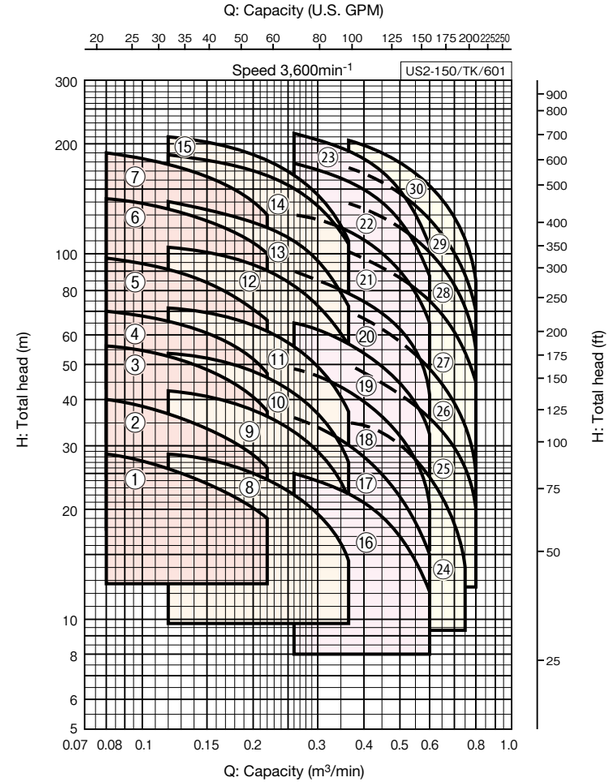

Specification & Dimension table

* Except for cable mass

Bore	Ref	Model	Motor		No. of stage	Standard specifications				Dimensions (mm)			Flange combination dimensions				Mass*	Application well cover
						Q	H	Q	H									
mm			kW	hp		m³/min	m	m³/min	m	ML	TL	W	d	g	n	k	kg	
40	①	US2-406-1.1C	1.1	1.5	2	0.08	28.5	0.22	19	298	800	140	40	90	6	M10	27	SDT-S40
	②	US2-406-1.5C	1.5	2	3	0.08	40	0.22	26	346	888	140	40	90	6	M10	30	
	③	US2-406-2.2CR	2.2	3	4	0.08	56	0.22	38	389	971	140	40	90	6	M10	32	
	④	US2-406-2.7C	2.7	3.5	5	0.08	70	0.22	49	589	1211	140	40	90	6	M10	41	
	⑤	US2-406-3.7C	3.7	5	7	0.08	98	0.22	66	589	1291	140	40	90	6	M10	44	
	⑥	US2-406-5.5C	5.5	7.5	10	0.08	143	0.22	98	543	1375	141	40	90	6	M10	67	
	⑦	US2-406-7.5C	7.5	10	14	0.08	192	0.22	128	603	1635	141	40	90	6	M10	85	
50	⑧	US2-506-1.5C	1.5	2	2	0.12	28.5	0.36	14.5	346	858	140	50	100	6	M10	29	SDT-S50
	⑨	US2-506-2.2CR	2.2	3	3	0.12	42.5	0.36	21.5	389	941	140	50	100	6	M10	31	
	⑩	US2-506-2.7C	2.7	3.5	4	0.12	54	0.36	26.5	589	1181	140	50	100	6	M10	40	
	⑪	US2-506-3.7C	3.7	5	5	0.12	71	0.36	37	589	1221	140	50	100	6	M10	41	
	⑫	US2-506-5.5C	5.5	7.5	7	0.12	105	0.36	56	543	1265	141	50	100	6	M10	62	
	⑬	US2-506-7.5C	7.5	10	10	0.12	141	0.36	72	603	1445	141	50	100	6	M10	77	
	⑭	US2-506L-11C	11	15	13	0.12	188	0.36	105	733	1735	142	50	100	6	M10	104	
	⑮	US2-506-11C	11	15	15	0.12	212	0.36	110	733	1815	142	50	100	6	M10	108	
65	⑯	US2-656-2.2CR	2.2	3	2	0.26	25	0.6	12	389	931	140	65	115	8	M10	31	SDT-S65
	⑰	US2-656-2.7C	2.7	3.5	3	0.26	36	0.6	15	589	1181	140	65	115	8	M10	41	
	⑱	US2-656-3.7C	3.7	5	4	0.26	49	0.6	21	589	1231	140	65	115	8	M10	42	
	⑲	US2-656-5.5C	5.5	7.5	5	0.26	65	0.6	32	543	1245	141	65	115	8	M10	63	
	⑳	US2-656-7.5C	7.5	10	7	0.26	90	0.6	44	603	1405	141	65	115	8	M10	77	
	㉑	US2-656-11C	11	15	10	0.26	130	0.6	65	733	1685	142	65	115	8	M10	96	
	㉒	US2-656-15C	15	20	14	0.26	178	0.6	87	818	2020	142	65	115	8	M10	113	
	㉓	US2-656-18C	18.5	25	17	0.26	215	0.6	103	890	2242	142	65	115	8	M10	127	
80	㉔	USN2-806-3.7C	3.7	5	3	0.36	35	0.75	14	590	1182	140	80	118	8	M10	44	SDT-SN80
	㉕	USN2-806-5.5C	5.5	7.5	4	0.36	50	0.8	19	543	1195	141	80	118	8	M10	62	
	㉖	USN2-806-7.5C	7.5	10	6	0.36	71	0.8	25	603	1355	141	80	118	8	M10	72	
	㉗	USN2-806-11C	11	15	8	0.36	102	0.8	42	733	1585	142	80	118	8	M10	93	
	㉘	USN2-806-15C	15	20	11	0.36	138	0.8	55	818	1870	142	80	118	8	M10	107	
	㉙	USN2-806-18C	18.5	25	14	0.36	172	0.8	68	890	2092	142	80	118	8	M10	122	
	㉚	USN2-806-22C	22	30	16	0.36	205	0.8	85	970	2272	142	80	118	8	M10	142	

50Hz Min. well bore 200mm

Outline dimension table

Inquire specification sheets and drawings before actual work planing

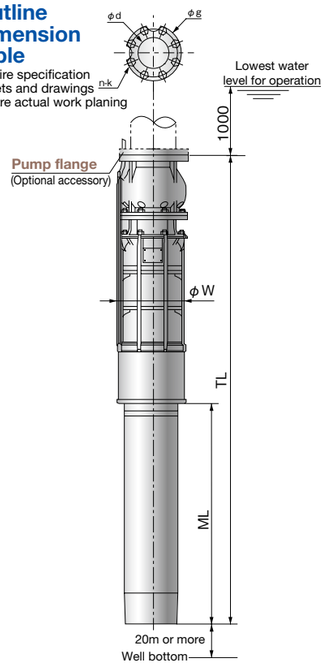

Selection chart

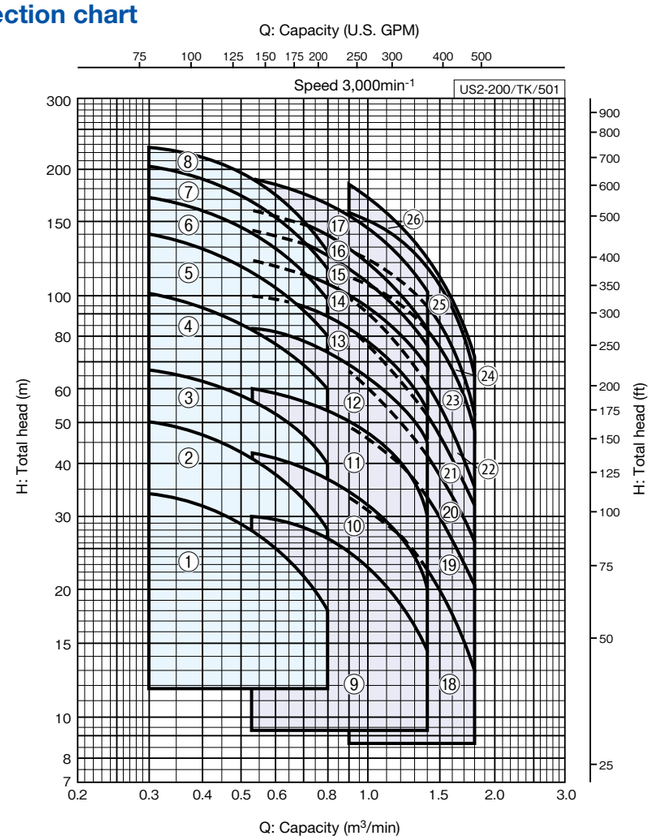

Specification & Dimension table

* Except for cable mass

Bore	Ref	Model	Motor		No. of stage	Standard specifications				Dimensions (mm)			Flange combination dimensions				Mass*	Application well cover
						Q	H	Q	H									
mm			kW	hp		m³/min	m	m³/min	m	ML	TL	W	d	g	n	k	kg	
80	①	US2-805-3.7C	3.7	5	2	0.3	34	0.8	18	488	1108	186	80	136	8	M12	68	SDT-S80
	②	US2-805-5.5C	5.5	7.5	3	0.3	50	0.8	28	543	1213	186	80	136	8	M12	76	
	③	US2-805-7.5C	7.5	10	4	0.3	67	0.8	38	603	1323	186	80	136	8	M12	86	
	④	US2-805-11C	11	15	6	0.3	102	0.8	58	733	1553	187	80	136	8	M12	108	
	⑤	US2-805-15C	15	20	8	0.3	140	0.8	80	818	1738	187	80	136	8	M12	124	
	⑥	US2-805-18C	18.5	25	10	0.3	170	0.8	96	890	1910	187	80	136	8	M12	139	
	⑦	US2-805-22C	22	30	12	0.3	205	0.8	118	970	2140	187	80	136	8	M12	165	
	⑧	US2-805-26C	26	35	14	0.3	228	0.8	128	992	2277	189	80	136	8	M12	210	
100	⑨	US2-1005-5.5C	5.5	7.5	2	0.53	30	1.4	14	543	1223	186	100	155	8	M12	73	SDT-S100
	⑩	US2-1005-7.5C	7.5	10	3	0.53	42	1.4	20	603	1358	186	100	155	8	M12	83	
	⑪	US2-1005-11C	11	15	4	0.53	60	1.4	31	733	1563	187	100	155	8	M12	102	
	⑫	US2-1005-15C	15	20	5	0.53	82	1.4	45	818	1723	187	100	155	8	M12	115	
	⑬	US2-1005-18C	18.5	25	6	0.53	100	1.4	55	890	1870	187	100	155	8	M12	126	
	⑭	US2-1005-22C	22	30	7	0.53	119	1.4	68	970	2025	187	100	155	8	M12	146	
	⑮	US2-1005-26C	26	35	9	0.53	143	1.4	76	992	2262	189	100	155	8	M12	193	
	⑯	US2-1005-30C	30	40	10	0.53	160	1.4	84	992	2337	189	100	155	8	M12	197	
	⑰	US2-1005-37C	37	50	12	0.53	190	1.4	102	1057	2487	191	100	155	8	M12	222	
	⑱	US2-1005B-7.5C	7.5	10	2	0.9	33	1.8	13	603	1383	186	100	155	8	M12	85	
	⑲	US2-1005B-11C	11	15	3	0.9	49	1.8	20.5	733	1638	187	100	155	8	M12	109	
	⑳	US2-1005B-15C	15	20	4	0.9	67	1.8	26	818	1848	187	100	155	8	M12	126	
	㉑	US2-1005B-18C	18.5	25	5	0.9	83	1.8	32.5	890	2045	187	100	155	8	M12	142	
	㉒	US2-1005B-22C	22	30	6	0.9	99	1.8	36	970	2250	187	100	155	8	M12	166	
	㉓	US2-1005B-26C	26	35	6	0.9	110	1.8	48	998	2293	187	100	155	8	M12	203	
	㉔	US2-1005B-30C	30	40	7	0.9	128	1.8	54	998	2418	187	100	155	8	M12	212	
	㉕	US2-1005B-37C	37	50	9	0.9	158	1.8	65	1063	2733	187	100	155	8	M12	245	
	㉖	US2-1005B-45C	45	60	11	0.9	185	1.8	72	1128	3048	187	100	155	8	M12	273	

60Hz Min. well bore 200mm

Outline dimension table

Inquire specification sheets and drawings before actual work planing

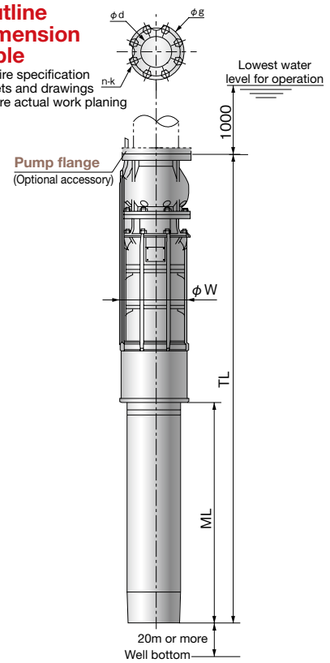

Selection chart

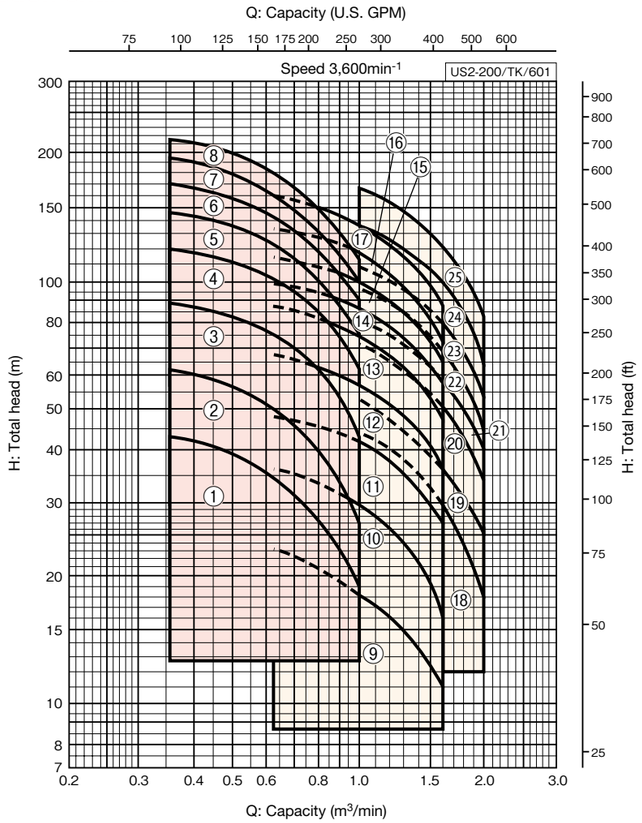

Specification & Dimension table

* Except for cable mass

Bore	Ref	Model	Motor		No. of stage	Standard specifications				Dimensions (mm)			Flange combination dimensions				Mass*	Application well cover
						Q	H	Q	H									
mm			kW	hp		m³/min	m	m³/min	m	ML	TL	W	d	g	n	k	kg	
80	①	US2-806-5.5C	5.5	7.5	2	0.36	42	1.0	19	543	1163	186	80	136	8	M12	73	SDT-S80
	②	US2-806-7.5C	7.5	10	3	0.36	61	1.0	27	603	1273	186	80	136	8	M12	82	
	③	US2-806-11C	11	15	4	0.36	89	1.0	43	733	1453	187	80	136	8	M12	100	
	④	US2-806-15C	15	20	5	0.36	120	1.0	62	818	1588	187	80	136	8	M12	113	
	⑤	US2-806-18C	18.5	25	6	0.36	145	1.0	76	890	1710	187	80	136	8	M12	124	
	⑥	US2-806-22C	22	30	7	0.36	170	1.0	91	970	1840	187	80	136	8	M12	143	
	⑦	US2-806-26C	26	35	9	0.36	192	1.0	100	992	1927	189	80	136	8	M12	186	
	⑧	US2-806-30C	30	40	10	0.36	215	1.0	112	992	1977	189	80	136	8	M12	190	
100	⑨	US2-1006-5.5C	5.5	7.5	1	0.63	23	1.6	11	543	1148	186	100	155	8	M12	69	SDT-S100
	⑩	US2-1006-7.5C	7.5	10	2	0.63	36	1.6	16	603	1283	186	100	155	8	M12	79	
	⑪	US2-1006-11C	11	15	2	0.63	48	1.6	27	733	1413	187	100	155	8	M12	94	
	⑫	US2-1006-15C	15	20	3	0.63	68	1.6	37	818	1573	187	100	155	8	M12	107	
	⑬	US2-1006-18C	18.5	25	4	0.63	86	1.6	47	890	1720	187	100	155	8	M12	118	
	⑭	US2-1006-22C	22	30	4	0.63	98	1.6	58	970	1800	187	100	155	8	M12	133	
	⑮	US2-1006-26C	26	35	5	0.63	114	1.6	65	992	1912	189	100	155	8	M12	174	
	⑯	US2-1006-30C	30	40	6	0.63	134	1.6	73	992	1987	189	100	155	8	M12	178	
	⑰	US2-1006-37C	37	50	7	0.63	160	1.6	88	1057	2177	191	100	155	8	M12	202	
	⑱	US2-1006B-11C	11	15	2	1.0	44	2.0	18	733	1513	187	100	155	8	M12	100	
	⑲	US2-1006B-15C	15	20	2	1.0	53	2.0	25.5	818	1598	187	100	155	8	M12	109	
	⑳	US2-1006B-18C	18.5	25	3	1.0	72	2.0	34	890	1795	187	100	155	8	M12	125	
	㉑	US2-1006B-22C	22	30	3	1.0	80	2.0	40	970	1875	187	100	155	8	M12	140	
	㉒	US2-1006B-26C	26	35	4	1.0	97	2.0	44	992	2043	187	100	155	8	M12	186	
	㉓	US2-1006B-30C	30	40	4	1.0	108	2.0	53	992	2043	187	100	155	8	M12	186	
	㉔	US2-1006B-37C	37	50	5	1.0	136	2.0	64	1057	2233	187	100	155	8	M12	209	
	㉕	US2-1006B-45C	45	60	6	1.0	166	2.0	82	1122	2423	187	100	155	8	M12	228	

50Hz Min. well bore 250mm 300mm

Selection chart

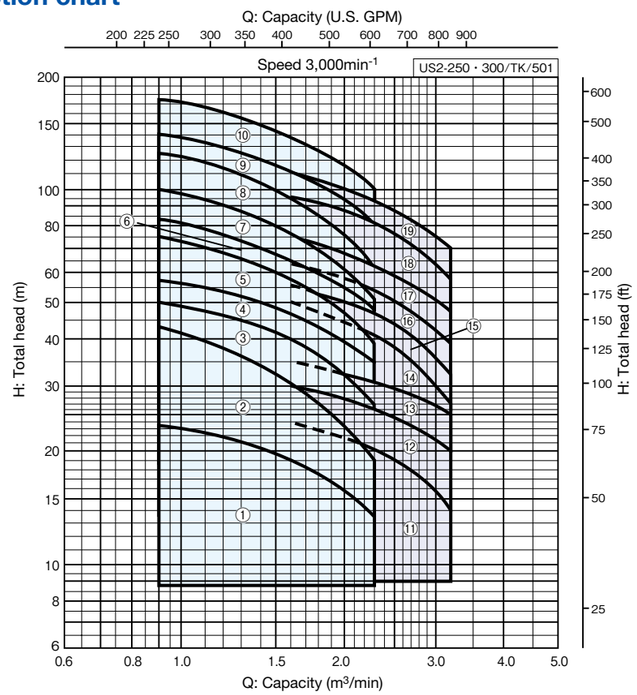

Outline dimension table

Inquire specification sheets and drawings before actual work planing

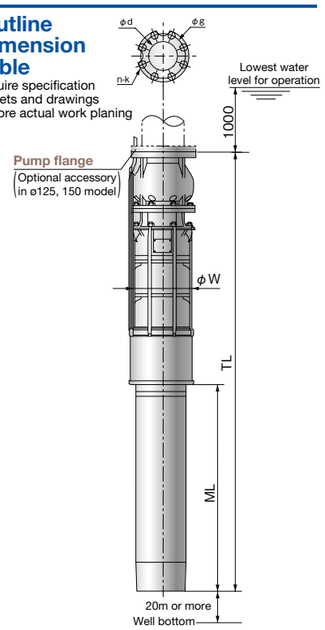

Specification & Dimension table

* Except for cable mass

Well bore	Bore	Ref	Model	Motor		No. of stage	Standard specifications				Dimensions (mm)			Flange combination dimensions				Mass*	Application well cover
							Q	H	Q	H									
mm	mm			kW	hp		m³/min	m	m³/min	m	ML	TL	W	d	g	n	k	kg	
250	125	①	US2-1255-7.5C	7.5	10	1	0.9	23.5	2.3	13.5	603	1183	234	125	190	8	M16	95	SDT-S125
		②	US2-1255-11C	11	15	2	0.9	42	2.3	19	733	1433	234	125	190	8	M16	121	
		③	US2-1255-15C	15	20	2	0.9	50	2.3	27	818	1518	234	125	190	8	M16	129	
		④	US2-1255-18C	18.5	25	2	0.9	57	2.3	35	890	1590	234	125	190	8	M16	136	
		⑤	US2-1255-22C	22	30	3	0.9	75	2.3	39	970	1790	234	125	190	8	M16	157	
		⑥	US2-1255-26C	26	35	3	0.9	83	2.3	47	992	1822	234	125	190	8	M16	198	
		⑦	US2-1255-30C	30	40	4	0.9	100	2.3	51	992	1942	234	125	190	8	M16	208	
		⑧	US2-1255-37C	37	50	5	0.9	124	2.3	62	1057	2127	234	125	190	8	M16	234	
		⑨	US2-1255-45C	45	60	5	0.9	140	2.3	80	1122	2192	234	125	190	8	M16	244	
		⑩	US2-1255-55C	55	75	6	0.9	174	2.3	100	1212	2402	234	125	190	8	M16	270	
300	150	⑪	US2-1505-11C	11	15	1	1.6	24	3.2	14	733	1383	282	150	224	8	M16	120	SDT-S150
		⑫	US2-1505-15C	15	20	1	1.6	30	3.2	20	818	1468	282	150	224	8	M16	128	
		⑬	US2-1505-18C	18.5	25	1	1.6	35	3.2	25	890	1540	282	150	224	8	M16	135	
		⑭	US2-1505-22C	22	30	2	1.6	50	3.2	27	970	1740	282	150	224	8	M16	165	
		⑮	US2-1505-26C	26	35	2	1.6	56	3.2	32	992	1772	282	150	224	8	M16	205	
		⑯	US2-1505-30C	30	40	2	1.6	64	3.2	39	992	1772	282	150	224	8	M16	205	
		⑰	US2-1505-37C	37	50	2	1.6	74	3.2	48	1057	1837	282	150	224	8	M16	220	
		⑱	US2-1505-45C	45	60	3	1.6	96	3.2	57	1122	2022	282	150	224	8	M16	245	
		⑲	US2-1505-55C	55	75	3	1.6	110	3.2	70	1212	2112	282	150	224	8	M16	260	

60Hz Min. well bore 250mm 300mm

Selection chart

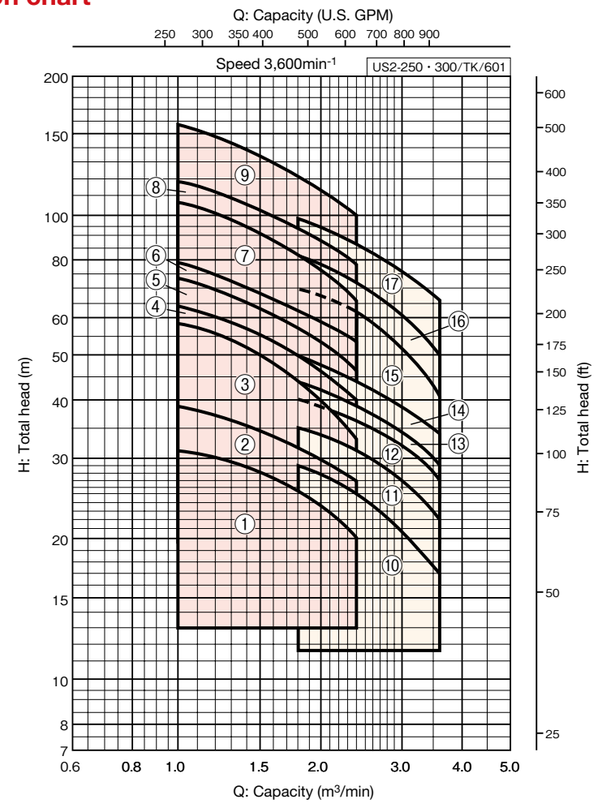

Outline dimension table

Inquire specification sheets and drawings before actual work planing

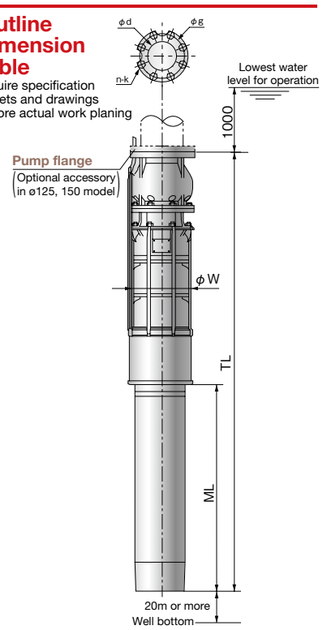

Specification & Dimension table

* Except for cable mass

Well bore	Bore	Ref	Model	Motor		No. of stage	Standard specifications				Dimensions (mm)			Flange combination dimensions				Mass*	Application well cover
							Q	H	Q	H									
mm	mm			kW	hp		m³/min	m	m³/min	m	ML	TL	W	d	g	n	k	kg	
250	125	①	US2-1256-11C	11	15	1	1.0	31	2.4	20	733	1313	234	125	190	8	M16	110	SDT-S125
		②	US2-1256-15C	15	20	1	1.0	38	2.4	27	818	1398	234	125	190	8	M16	119	
		③	US2-1256-18C	18.5	25	2	1.0	58	2.4	33	890	1590	234	125	190	8	M16	136	
		④	US2-1256-22C	22	30	2	1.0	64	2.4	40	970	1670	234	125	190	8	M16	146	
		⑤	US2-1256-26C	26	35	2	1.0	73	2.4	47	992	1702	234	125	190	8	M16	187	
		⑥	US2-1256-30C	30	40	2	1.0	79	2.4	53	992	1702	234	125	190	8	M16	187	
		⑦	US2-1256-37C	37	50	3	1.0	106	2.4	66	1057	1887	234	125	190	8	M16	213	
		⑧	US2-1256-45C	45	60	3	1.0	118	2.4	79	1122	1952	234	125	190	8	M16	223	
		⑨	US2-1256-55C	55	75	4	1.0	154	2.4	100	1212	2162	234	125	190	8	M16	249	
300	150	⑩	US2-1506-15C	15	20	1	1.8	29	3.6	17	818	1468	282	150	224	8	M16	128	SDT-S150
		⑪	US2-1506-18C	18.5	25	1	1.8	35	3.6	22	890	1540	282	150	224	8	M16	135	
		⑫	US2-1506-22C	22	30	1	1.8	40	3.6	27	970	1620	282	150	224	8	M16	150	
		⑬	US2-1506-26C	26	35	1	1.8	43	3.6	29	992	1652	282	150	224	8	M16	190	
		⑭	US2-1506-30C	30	40	1	1.8	49	3.6	34	992	1652	282	150	224	8	M16	190	
		⑮	US2-1506-37C	37	50	2	1.8	70	3.6	41	1057	1837	282	150	224	8	M16	220	
		⑯	US2-1506-45C	45	60	2	1.8	82	3.6	50	1122	1902	282	150	224	8	M16	230	
		⑰	US2-1506-55C	55	75	2	1.8	98	3.6	66	1212	1992	282	150	224	8	M16	245	

Optional accessory

Control panel

Control method in each panel

According to the installation environment, a wide variety of type can be chosen from the outdoor type (ECAW 3 type, ECAD 3 type with pole), simple outdoor type (ECAJ 3 type), exclusive for snow melting type, in addition to the indoor type (ECA 3 type).

· Automatic operation & Manual operation are available. · Reservoir full & low level alarm is equipped as standard. · Space for attaching Earth leakage breaker and Advance phase capacitor is held in the models 11kW or more. 3 contactors method is adopted in the model 11kW or more, and 4 contactors method is adopted in the variant model equipping Advance phase capacitor for secure 3E relay operation.

Indoor

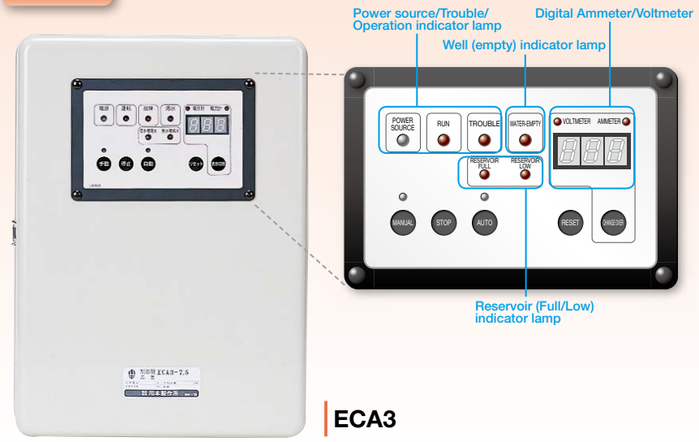

ECA3

Outdoor (simple edition)

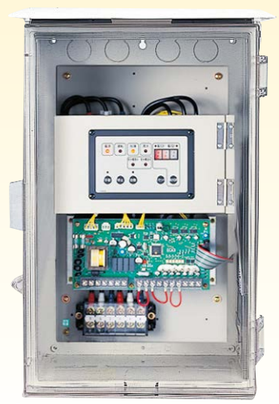

ECAJ3 type

Outdoor

ECAJ3 type

ECAD3 type (with pole)

ECASN3 type (for snow melting)

Specification table

Variation			ECA3 type (Indoor type)	ECAW3 & ECAD3 type (outdoor) ※1	ECAJ3 type (outdoor: simple edition) ※2		ECASN3 type (for snow melting) ※3	
Standard specifications		3E relay	0.75kW ~ 5.5kW	ECAW3: 0.75kW ~ 55kW ECAD3: 0.75kW ~ 7.5kW	0.75kW ~ 7.5kW		0.75kW ~ 22kW	
		Digital Ammeter/Voltmeter						
		Power source/Trouble/Operation indicator lamp						
		Trouble (Overload/Open ph./Reverse ph.)						
		Reservoir (Full/Low) indicator lamp						
		Well (empty) indicator lamp						
		Voltage-free external signal (Operation/Trouble/Full & Low water level)						
Variant	01	Earth leakage circuit breaker	0.75kW ~ 22kW	ECAW3: 0.75kW ~ 22kW ECAD3: 0.75kW ~ 7.5kW	0.75kW ~ 7.5kW	01	With space for snowfall sensor attachment	0.75kW ~ 22kW
	02	Earth leakage circuit breaker and Advance phase capacitor				02	Self standing pole type for outdoor (with snowfall sensor)	0.75kW ~ 7.5kW

※1 JIS C 0920 protection class 3 (rain-proof)
※2 JIS C 0920 protection class 4 (Splash-proof type equivalent): Exclusive under eaves. ※3 with Snow sensor controller, Earth leakage breaker, Advance phase capacitor and small box.

Control panel wiring example (ECA3, ECAW3, ECAD3, ECAJ3)

In case of ECA3 standard model

Display	Status
OL	Overload
rEV	Reverse phase
PF	Open phase
CHA	Over repetition of use

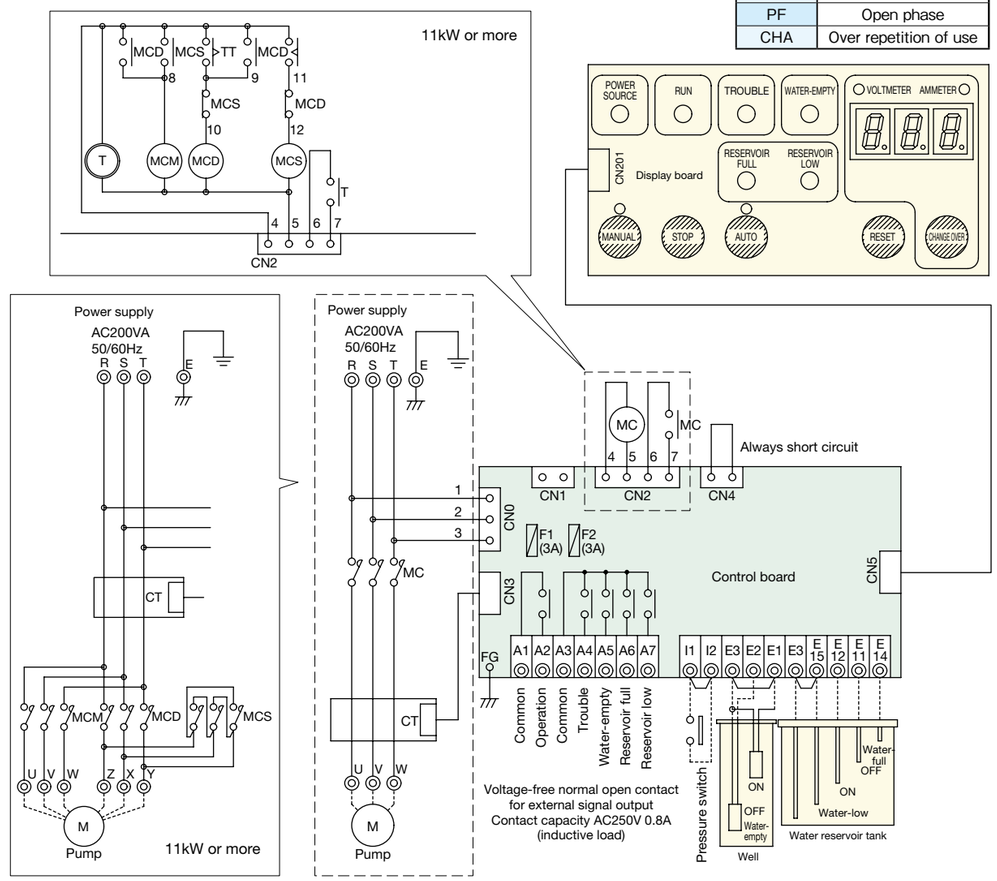

Precautions

- When 3E relay works, remove the causes and then, reset.
  if reset is necessary without removing the causes, be sure to secure cool down time for more than 10 minutes. (for motor protection)
- When connecting Pressure switch or water supply limitation timer and so on to I1-I2 terminal, remove the short circuit wire and connect them.
- When using Submersible electrode EHS-2, remove the short circuit wire across E3-E1 terminal, and then, connect Black code to E3, and White code to E2 (E1).
- If detecting reservoir full and low, remove the short circuit wire across E3-E15 terminal.
- Each time CHANGEOVER button is pressed, display of supplied voltage and motor current will be changed.
- Reset button is used for reset both 3E trip and empty.
- 3E trip test can be conduct by pushing a reset button while pushing CHANGEOVER button.
- In the case 3E relay trip, display will be as above.

Optional accessory

Extension cable

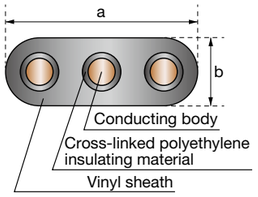

600V Croll-linked polyethylene Vinyl Cabtyre flat type (CVCTF)

About extension cable, select suitable length with referring to the following table.

Extension cable specification table

Nominal section area (2mm²)	Conducting body external dia. (mm)	Finished external dia. (mm)		Conductor resistance (20℃) (Ω/km)	Allowable current (A) * (ambient temperature 30℃)	Approx. mass (kg/km)
		a	b			
1.25	1.5	12.7 ± 0.9	6.5 ± 0.5	14.7	19	121
2.0	1.8	13.8 ± 1.0	7.0 ± 0.6	9.5	25	148
3.5	2.5	15.9 ± 1.0	7.7 ± 0.7	5.09	36	212
5.5	3.1	19.3 ± 1.0	9.1 ± 0.8	3.27	47	322
8.0	3.7	21.3 ± 1.0	9.9 ± 0.8	2.32	58	411
14	4.9	25.1 ± 1.1	11.3 ± 0.9	1.32	82	632
22	7.0	33.4 ± 1.3	14.6 ± 0.9	0.844	110	1,051
30	8.0	36.9 ± 1.5	15.9 ± 1.0	0.625	133	1,347
38	9.1	40.1 ± 1.6	17.1 ± 1.0	0.496	152	1,630
50	10.4	46.4 ± 1.7	19.6 ± 1.2	0.389	177	2,092
60	11.6	50.7 ± 1.8	21.2 ± 1.3	0.311	202	2,553
80	13.5	59.7 ± 1.9	24.7 ± 1.4	0.23	215	3,460

* The value obtained from calculation when 90℃ of the maximum allowable temperature of conduction body.

Well bore and cable size table

Model \ Well bore	Cable size (mm²)									
	100		150		200		250		300	
	PVC pipe	Carbon steel pipe silencer	PVC pipe	Carbon steel pipe silencer	PVC pipe	Carbon steel pipe silencer	PVC pipe	Carbon steel pipe silencer	PVC pipe	Carbon steel pipe silencer
US2-25	38	50								
US2-32	22	30								
USN2-40	22	22								
USN2-50	14	14								
US2-40			30	38						
US2-50			22	30						
US2-65			14	14						
USN2-80			14	14						
US2-80					30	38				
US2-100					30	30				
US2-125							50	60		
US2-150									60	80

For deep well submersible pump, installable cable size may vary depending on the well diameter and well casing material.
Pay attention to well diameter and casing material in case using heavy cable.
NOTE Refer to P.17 in case of using well cover.

Cable extension application table (200V)

50Hz/60Hz

Motor				Attached cable size (mm²× m)	Allowable cable length (including default cable)											
					Cable size (mm²)											
Start-up	Frame size	kW	hp		1.25	2	3.5	5.5	8	14	22	30	38	50	60	80
Direct start	M4	0.75	1	1.25 × 5	107/107	162/163	299/300	463/464	651/652							
		1.1	1.5	1.25 × 5	80/ 72	121/109	221/200	342/309	480/434							
		1.5	2	1.25 × 5	66/ 57	99/ 85	181/155	279/239	392/335							
		1.9	2.5	1.25 × 5	52/ 47	78/ 70	142/127	219/195	306/273	535/476						
		2.2	3	1.25 × 5	42/ 42	63/ 63	114/114	175/175	244/244	426/426						
		2.7	3.5	1.25 × 5	37/ 33	54/ 49	97/ 88	149/134	208/187	362/325						
		3.7	5	1.25 × 5		40/ 37	71/ 65	107/ 98	149/136	259/236						
		3.7	5	5.5 × 5				107/104	149/145	258/251						
		5.5	7.5	5.5 × 5				74/ 73	103/101	177/173	275/269	369/361				
		7.5	10	5.5 × 5				56/ 55	77/ 76	132/130	205/200	275/269				
Star-Delta	M6	11	15	5.5 × 5				58/ 58	79/ 80	136/136	211/211	283/283				
		15	20	5.5 × 5				45/ 44	61/ 60	104/102	161/158	215/211	270/265			
		18.5	25	5.5 × 5					50/ 50	85/ 85	131/130	175/174	219/218			
		22	30	5.5 × 5						74/ 74	113/113	151/151	190/189			
	M8	26	35	8 × 5						67/ 66	102/100	136/134	170/167	216/212		
		30	40	8 × 5						59/ 58	89/ 88	119/117	148/146	188/185	234/231	
		37	50	14 × 5							74/ 72	98/ 96	122/120	154/151	192/188	
		45	60	14 × 5								84/ 83	105/103	133/130	165/162	

Explanation

① In case of extension to 102m with 0.75kW
1.25mm² ×5m (attached cable) + 1.25mm² ×102m = Total Cable length: 107m
② In case of extension to 162m with 0.75kW
1.25mm² ×5m (attached cable) + 2.0mm² ×158m = 162m
Selecting the size of extension cable from above table, and add the length obtained by subtracting the length of attached cable from correspond length.
2 pcs cable is required for Star-Delta starting.

Cable extension application table (400V)

50Hz/60Hz

Motor				Attached cable size (mm²× m)	Allowable cable length (including default cable)									
					Cable size (mm²)									
Start-up	Frame size	kW	hp		1.25	2	3.5	5.5	8	14	22	30	38	50
Direct start	M4	0.75	1	1.25 × 5	413/413	636/637								
		1.1	1.5	1.25 × 5	305/275	469/424								
		1.5	2	1.25 × 5	246/211	378/324								
		1.9	2.5	1.25 × 5	193/172	296/264	549/489							
		2.2	3	1.25 × 5	156/156	239/239	442/442							
		2.7	3.5	1.25 × 5	133/120	203/183	376/337							
		3.7	5	1.25 × 5	96/ 88	146/133	269/245	416/378						
		3.7	5	5.5 × 5	95/ 93	145/141	267/260	414/402						
		5.5	7.5	5.5 × 5	67/ 65	100/ 98	184/180	283/277	397/389					
		7.5	10	5.5 × 5	50/ 49	76/ 74	137/134	211/206	296/289					
Star-Delta	M6	11	15	5.5 × 5	52/ 52	78/ 78	141/141	217/217	304/305	532/532				
		15	20	5.5 × 5		60/ 59	108/106	166/162	232/227	404/396	629/617			
		18.5	25	5.5 × 5			88/ 88	135/134	188/187	327/325	510/506			
		22	30	5.5 × 5			77/ 76	117/116	163/162	283/281	440/437	592/589		
	M8	26	35	8 × 5				104/103	145/144	251/249	391/387	526/521		
		30	40	8 × 5				92/ 91	127/126	221/218	343/338	461/455		
		37	50	14 × 5 / 8 × 5					105/103	181/178	281/275	377/370	474/466	
		45	60	14 × 5 / 8 × 5					91/ 89	156/153	241/237	324/318	407/399	
		50	75	14 × 5						128/127	198/196	266/263	334/330	424/419

Optional accessory

Submersible electrode

EHC type electrode holder

Model
EHC-3N type electrode holder (3p)
EHC-3N type electrode holder (3p)
EHC-5N type electrode holder (5p)
Electrode bar (1m)
Connection nut (large)
Separator (3P)

EHS-2 type submersible electrode

Model
EHS-2 with 25m code
EHS-2 with 30m code
EHS-2 with 40m code
EHS-2 with 50m code

Optional accessory

Water level gage

For monitoring water level during pump operation and setting pump ON/OFF water level.

Please inquire the detail

Control unit body

Water level gage

Optional accessory

Well cover
(Stainless steel)

Flange dimension

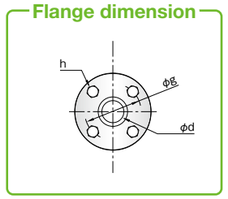

SDT-S type
(Bore 25 & 32mm)

* Foundation bolts are optional accessories. Please purchase separately.

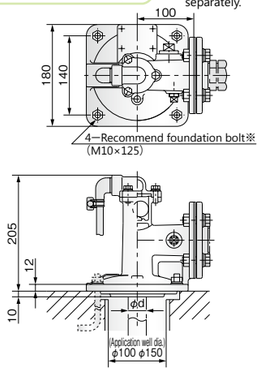

SDT-SN type
(Bore 40 & 50mm)

The value enclosed in ( ) are for the model having 50mm bore
* Foundation bolts are optional accessories. Please purchase separately.

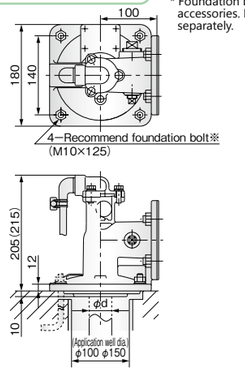

SDT-S(N)type
(Bore 40, 50, 65, 80mm)

The value enclosed in ( ) are for the model having 65 & 80 mm bore
* Foundation bolts are optional accessories. Please purchase separately.

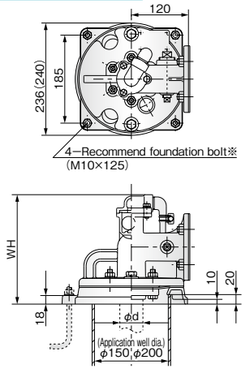

Unit: mm

Parts name	Dimensions
	WH
SDT-S40	230
SDT-S50	245
SDT-S65	252
SDT-SN80	267

SDT-S type
(Bore 80, 100, 125, 150mm)

The value enclosed in 〈 〉are for SDT-S125 & 150.
* Foundation bolts are optional accessories. Please purchase separately.

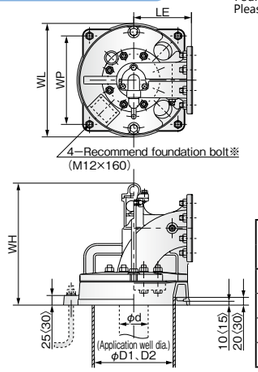

Unit: mm

Parts name	Dimensions			
	WL	WP	LE	WH
SDT-S80	290	230	150	317
SDT-S100	290	230	150	347
SDT-S125	360	280	220	387
SDT-S150	400	310	250	417

Bore d	Model name of well cover	Applicable Pump	Flange φd	Flange φg	Flange h	Mass kg	Allowable hanging mass kN	Attachable cable size mm²
25	SDT-S25	US2-25	Rc1	100	4-M12	7.5	8.8	14
32	SDT-S32	US2-32	Rc1¼	100	4-M12	7.5	11.8	14
40	SDT-SN40	USN2-40	Rc1½	105	4-M12	7.5	13.8	8
50	SDT-SN50	USN2-50	Rc2	120	4-M12	8	15.7	5.5
40	SDT-S40	US2-40	Rc1½	105	4-M12	11	19.6	22
50	SDT-S50	US2-50	Rc2	120	4-M12	12	25.5	22
65	SDT-S65	US2-65	Rc2½	140	4-M12	17	37.3	14 (150 φ Well) 30 (200 φ Well)

Bore d	Model name of well cover	Applicable Pump	Flange φd	Flange φg	Flange h	Mass kg	Allowable hanging mass kN	Attachable cable size mm²
80	SDT-SN80	USN2-80	Rc3	150	8-M12	16	43.2	14 (150 φ Well) 30 (200 φ Well)
80	SDT-S80	US2-80	Rc3	150	8-M12	22	49	30 (200 φ Well) 50 (250 φ Well)
100	SDT-S100	US2-100	Rc4	175	8-M12	24	60.8	30 (200 φ Well) 50 (250 φ Well)
125	SDT-S125	US2-125	Rc5	210	8-M16	38	79.4	60
150	SDT-S150	US2-150	Rc6	240	8-M16	45	87.3	60

Optional accessory

Sole plate
(Material: Steel)

Use for the well having large diameter

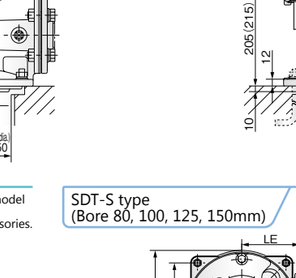

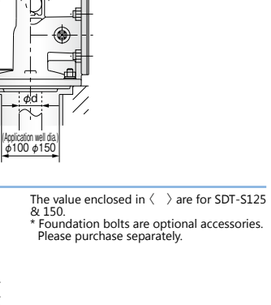

Unit: mm

Well cover & Sole plate (example of cast iron well hatch)

Name	Application well cover	Sole plate application well dia (mm)	WL	WP	WI	D	H	K	BI	Mass (kg)
Sole plate 200	SDT-S25・32 SDT-SN40・50	200	280	230	140	150	M8	12	16	7.6
Sole plate 250	SDT-S40 ～ 65 SDT-SN80	250	340	280	185	180	M8	12	16	11.3
Sole plate 300	SDT-S80・100	300	400	340	230	240	M10	15	19	17.1

Related products

Cyclone method

Sand separator
MHS40 type

Prevent water supply system from trouble by removing fine sands and solids included in the handled liquid from well or river, by cyclone method. As well as high separate/removing performance, easiness of the maintenance is a notable feature.

Application
- Separation and removal of the earth and solid mixed in the pumped up well water.
- Preprocess of iron/manganese removal and filtration

Separation and removal even fine sand by centrifugal force.

Cyclone method

having pumped water rotate with high-speed, and separates sand particle and water to upside and downside. Prevent water system from trouble from sand

Operation image

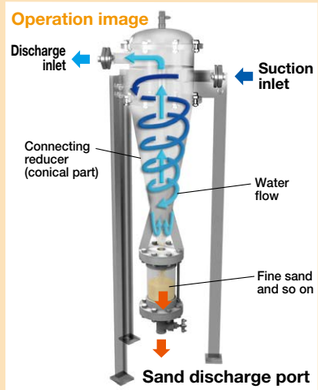

Tough to scratch, excellent durability

Nylon coating

Coating nylon on the inner surface to prevent it from wearing by the sand particles passing high speed. Nylon coating brings excellent toughness.

Easy cleaning, so always clean

Easy maintenance

No obstruction filter-less structure makes cleaning easy. Furthermore, conical part can be detach changing the piping, large-scale work is unnecessary for maintaining the conical part.

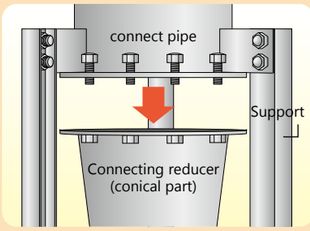

Easy to confirm removal status

Transparent sand collector

Just only a glance is needed to confirm sand collection status due to transparency. It contributes to enhancing work efficiency of sand discharging.

Standard specifications

Model	MHS40	Liquid quality	Liquid temperature	0 to 40 ℃ (no freezing)
Bore	40mm		PH	5.8 to 8.6
Installation	Indoor/Outdoor (ambient temperature 0 to 40℃)		Sand viscosity	1.5kg/m³ or less
Rated capacity	150 to 300L/min ※1		Sand specific gravity	2.5 or higher
Maximum operating pressure	0.7MPa		Separatable particle diameter	40μm or more ※2

Optional accessory	Flange set

※1 Do not use for a usage requiring large variation in a capacity such as a direct connection to faucet.
※2 removal rate is more than 90% (To remove particles having 40μm or less diameter, combination use of clarifier tank and so on may be required. Please inquire for detail.)

Dimension/ Structural drawing

■Unit: mm
■Mass: 75kg
Please request a delivery specification when planning for an installation.

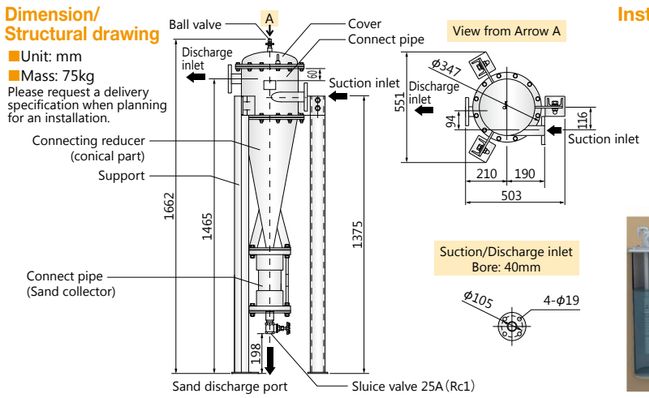

Installation example

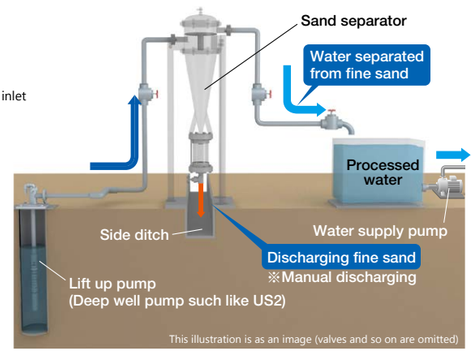

Series products

For hot spring, made of stainless steel

Deep well submersible pump

USM, USMH type

Optimal for "Simple spring", "Sodium-Chloride spring", "Sodium-Hydrogen carbonate spring". Adopting stainless steel, tough against hot spring composition like as chloride.

USM type

MAX 70°C liquid temperature

Stainless steel precision casting brings enhanced corrosion resistance

Exclusive design for high temperature hot spring

USMH type

MAX 90°C liquid temperature

Respond to high head
MAX depth: 350m
MAX head: 340m

Gas lock prevent model: USMH also available

Kawamoto

Comfort Earth®

To reduce the environmental burden and protect the environment, we at KAWAMOTO PUMP will keep on carrying out activities as a united force under our slogan "Comfort Earth", as a company involved with the valuable resource that is "water".

Important Safety Precautions

Always read the manual thoroughly and fully comprehend the contents for safe operation before starting use.Precautions for using products safely and for preventing personal injuries or physical damage are given in the manual. ※We bear no responsibility when the above listed precautions are not observed.

- Matters falling under the following may not be covered by the warranty: uses out of the specified scope of application, failure to comply with precautions, improper repairs and alterations, matters arising from natural disasters, matters arising from the installation environment (improper power source, foreign objects, sand etc.), non-compliance with laws and regulations or standards pertaining thereto, accidental or intentional damage or injury, replacement of consumable parts, defects due to resale, etc.
- Do not use the product for applications out of the product specifications. Doing so may cause electrical shock, fire, liquid leakage, etc.
- Close attention is needed when rusting, corrosion/elution are not permissible owing to the application or liquid properties. Take into account both the pump and the rest of the equipment when considering and selecting.
- Select a product which is appropriate for your application. Inappropriate use of products may cause accidents.
- When using this pump for living things (fishery, fish tank, aquarium, etc.) or important equipment, always prepare a spare unit. If the pump fails, an oxygen deficiency or degradation of water quality, etc., could occur and affect the creature's life.
- If used to transport food-related items, give due consideration to the materials used. Contamination by foreign objects may occur. Contamination by foreign objects may occur.
- Avoid using this product with living things that are susceptible to copper alloys. The life of the creature could be affected.
- Conduct construction in accordance with the applicable laws and regulations (the Technical Standards of Electric Installation, interior wiring regulation, Building Standards Act, etc.). Not only does it violate the laws and regulations, but it also may cause injuries due to electric shock, fire, falling and tipping over.
- Do not use in places where people are assumed to get in contact with the product (baths, pools, lakes, etc.). Electric leak may occur and cause electric shock.
- Depending on the equipment, attach a filter etc. appropriate for your application on the discharge side before use, perform thorough flushing and check that there is no contamination. Cutting oil, rubber mold releasing agent, foreign objects etc. from the manufacturing line and cutting oil, foreign objects etc. from the pipeline may contaminate the liquid which is to be handled.
- Do not operate pumps with a specification of 50 Hz at 60 Hz. Damage may arise as a result of excess pressure or burnout of the motor etc. due to overload.
- The Pump should never be disassembled, repaired, or modified, or the power cable should never be replaced by anyone other than a qualified repair technician. Improper repairs could result in electric shocks, fires, faults or break
- It is recommended that both periodic and daily inspections be performed in order to ensure that the pump will operate reliably for as long as possible. Failure to perform inspections may lead to pump failure, accidents etc. For periodic inspections, please consult your distributor or our nearest sales office.

Specifications/configurations may be altered as a result of improvements and such. Unauthorized reproduction of this document is prohibited.

Distributor

Kawamoto Pump MFG. CO., LTD.

Overseas Marketing Section
11-39, Osu 4-Chome, Naka-ku, Nagoya
460-8650, JAPAN

TEL: +81-52-251-7173 FAX: +81-52-747-5500
E-mail: kawamotobo@kawamoto-oms.com
http://www.kawamoto.co.jp

For any question about pumps, please contact your nearest distributor

Name	US2 type SANRONG
No.	1D06 Ⓣ