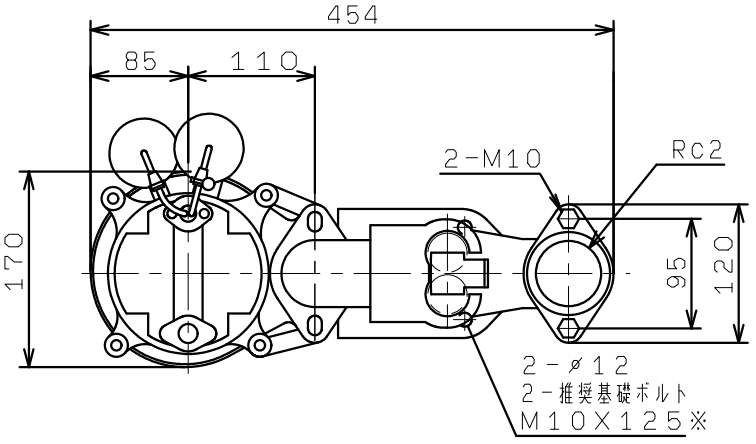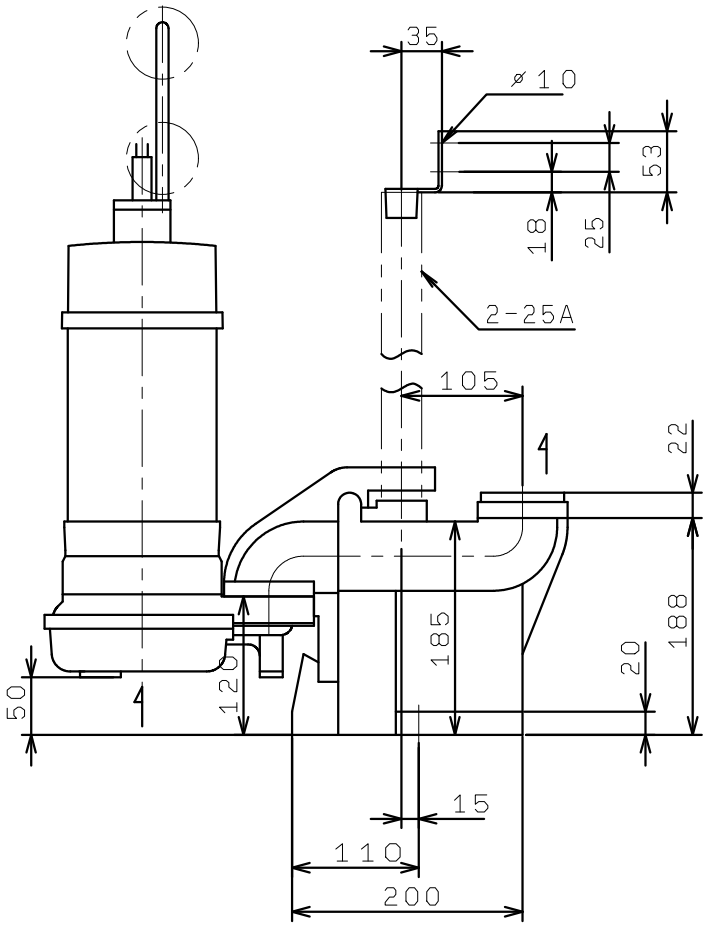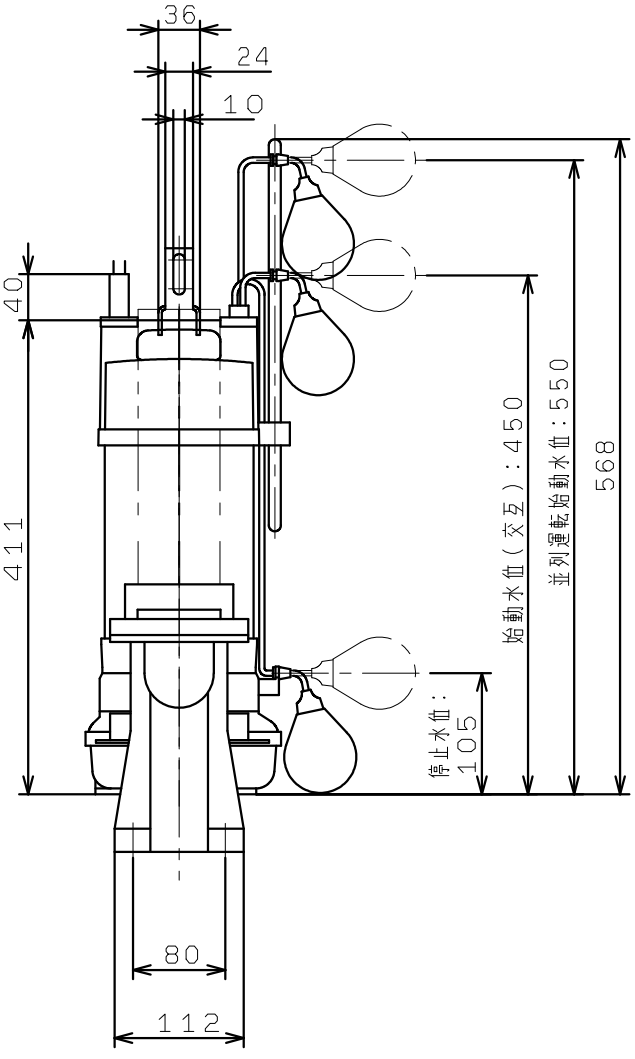WUZ4-505-0.75LN
WUZ4-506-0.75LN