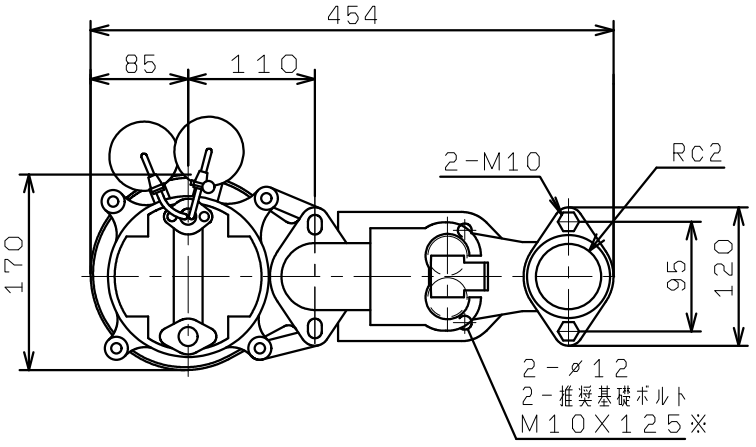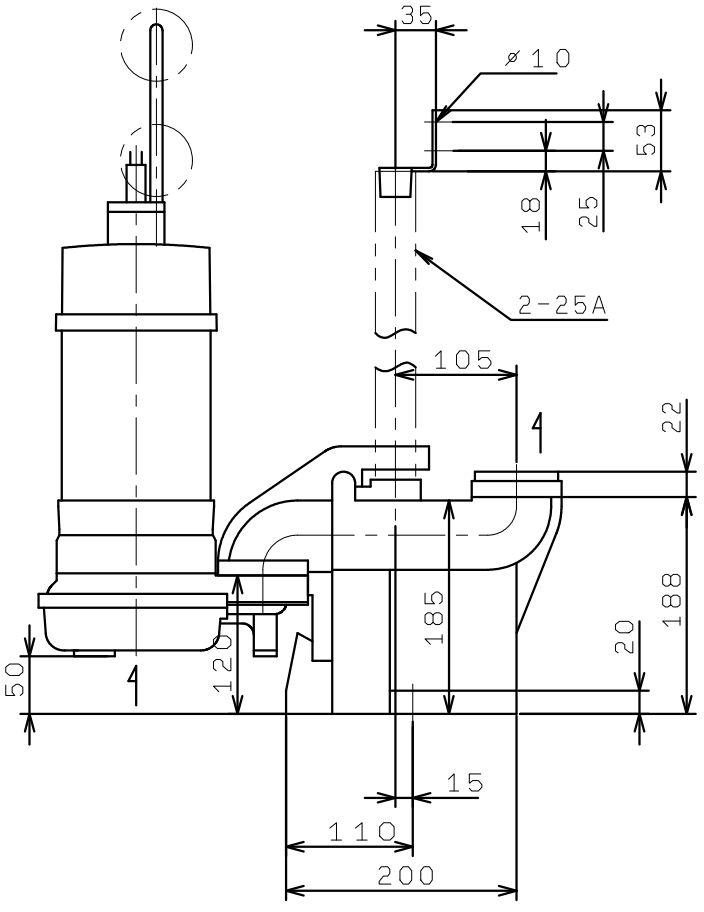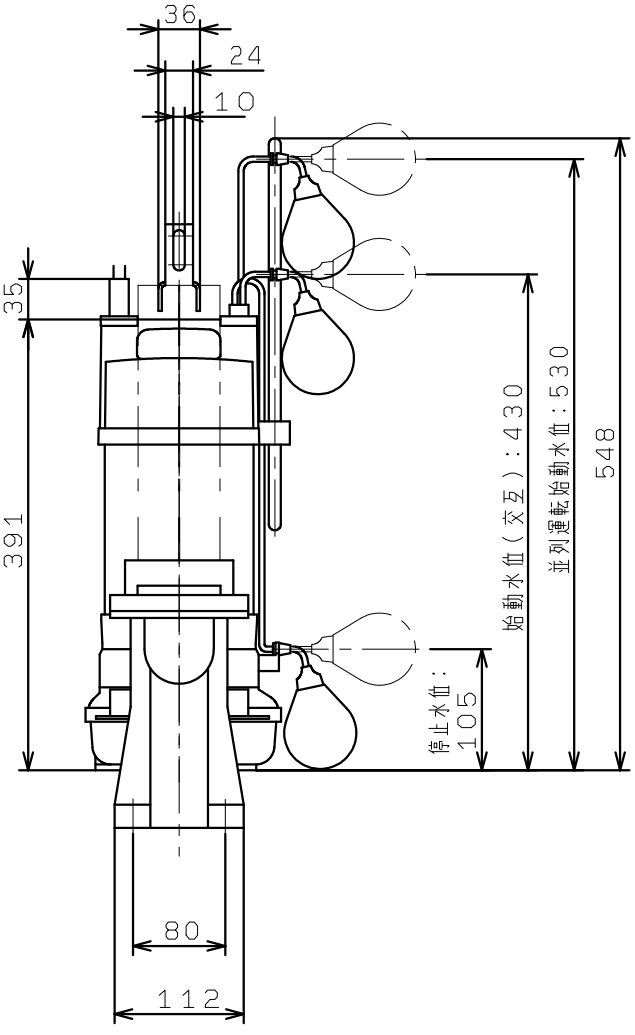WUZ4-505-0.4TLN
WUZ4-506-0.4TLN