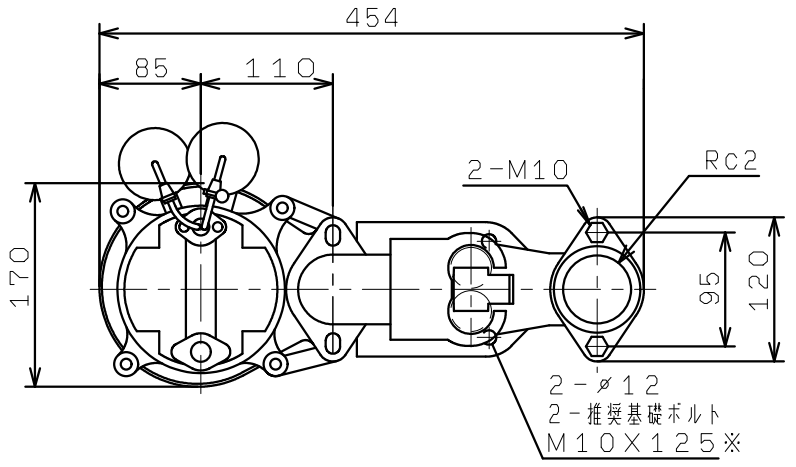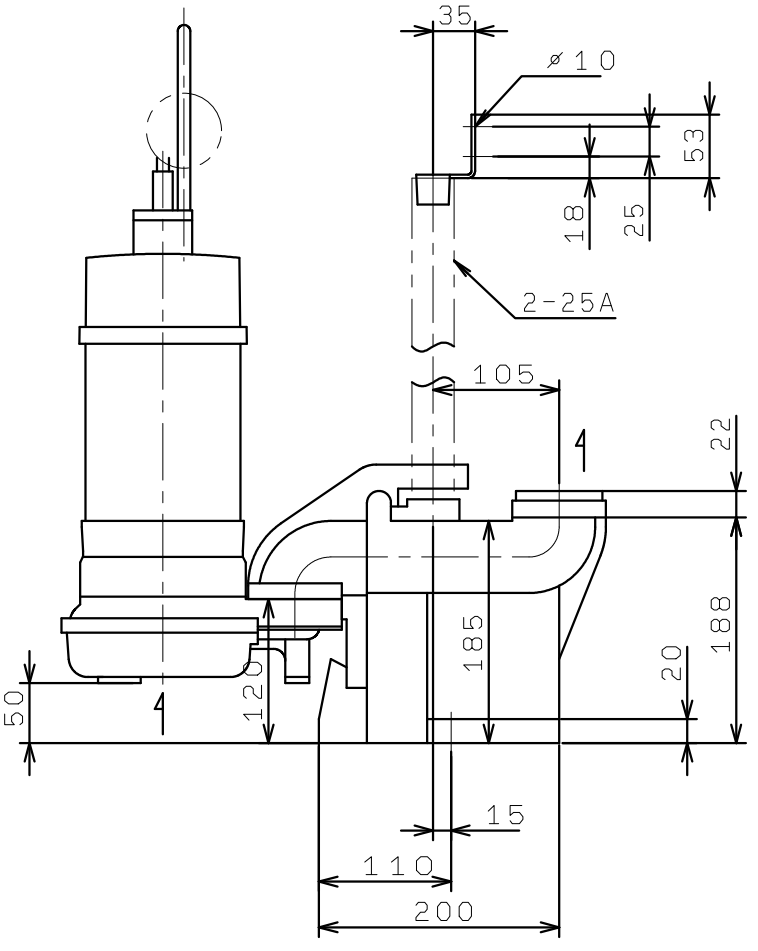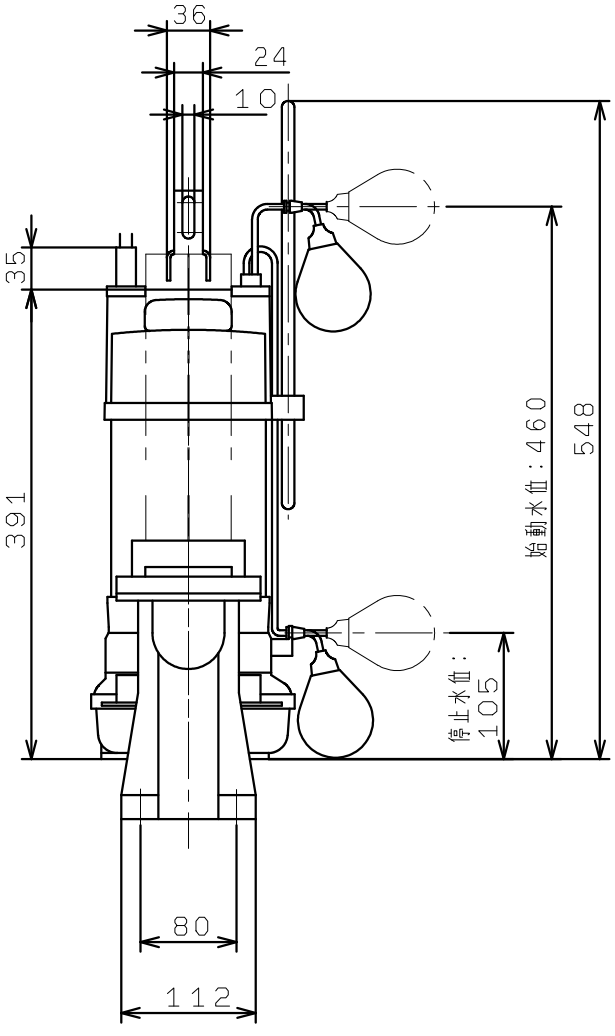WUZ4-505-0.4TL
WUZ4-506-0.4TL