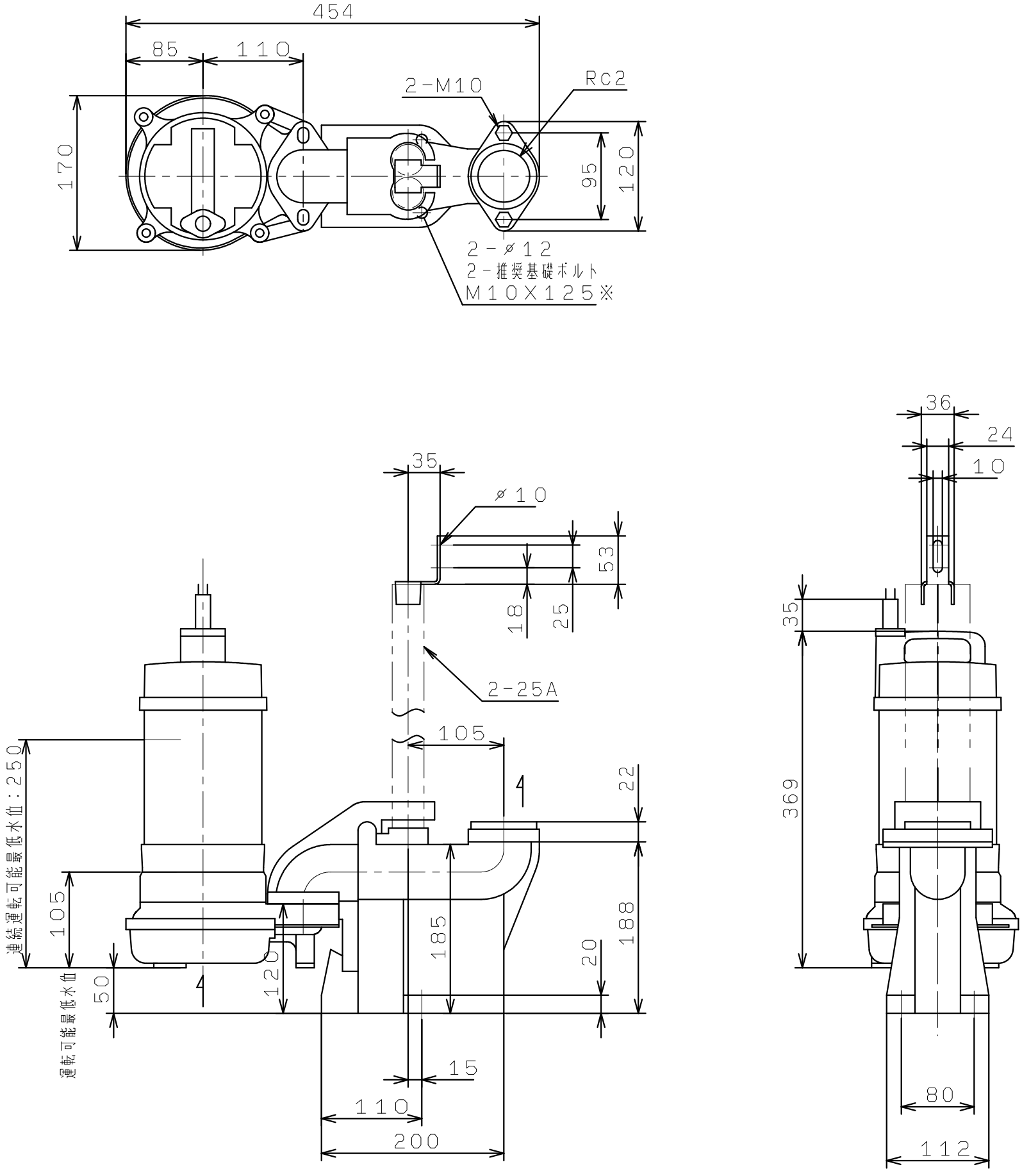WUZ4-505-0.4T
WUZ4-506-0.4T