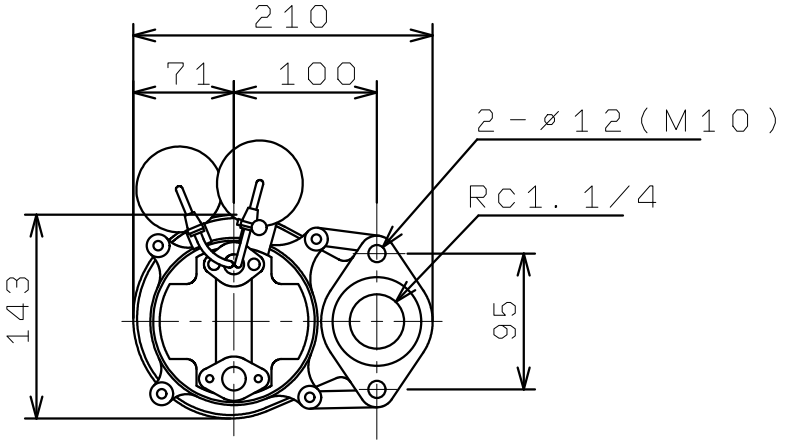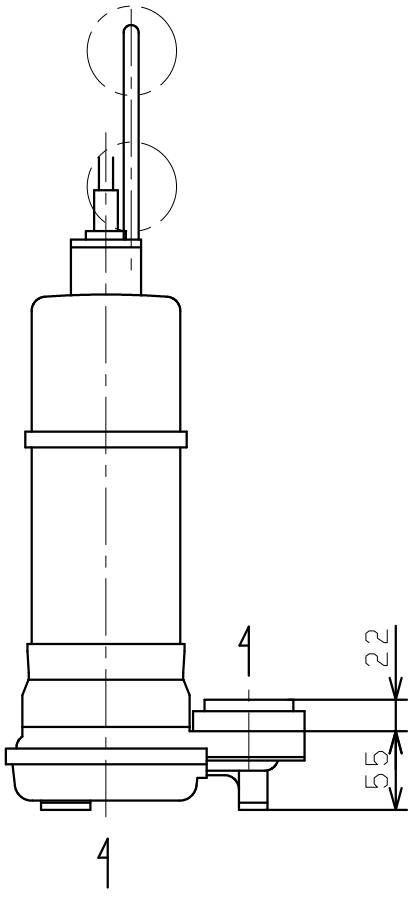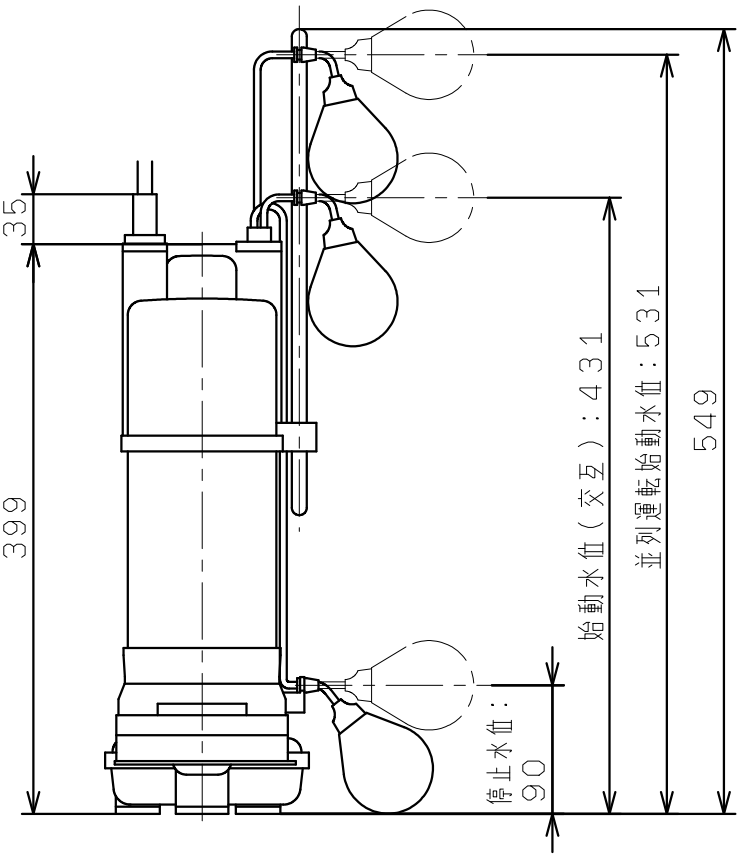WUZ4-325-0.15TLN
WUZ4-326-0.15TLN