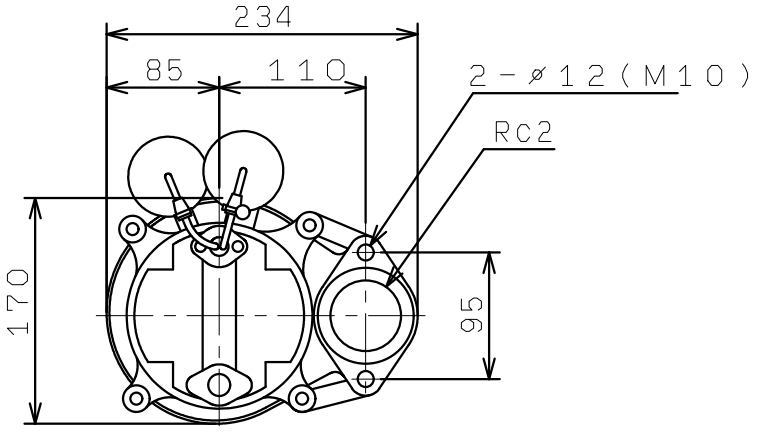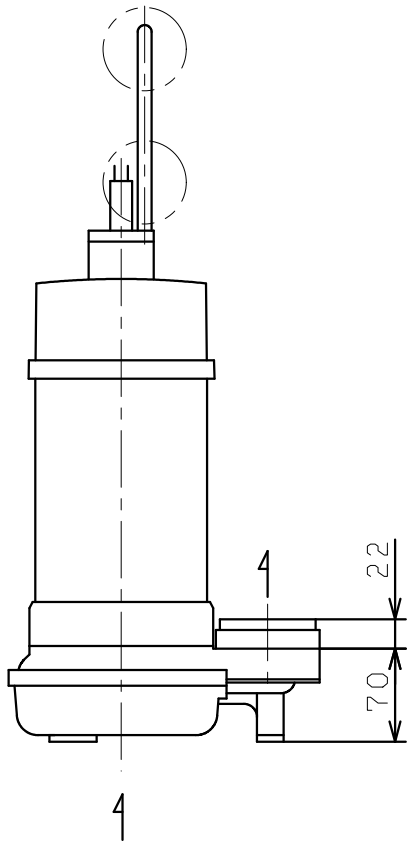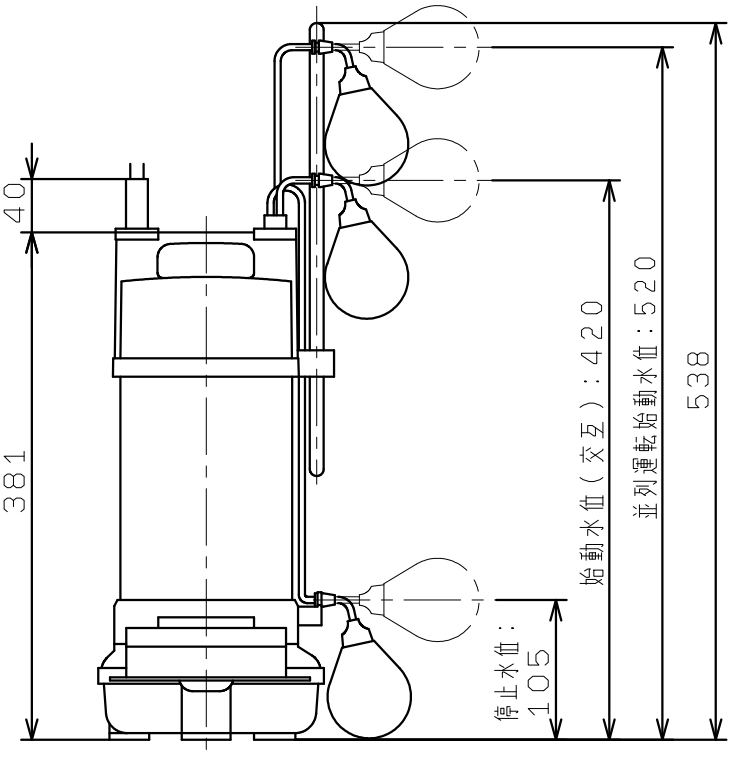WUP4-505-0.75LN
WUP4-506-0.75LN