WUP4-405-0.25T
WUP4-406-0.25T
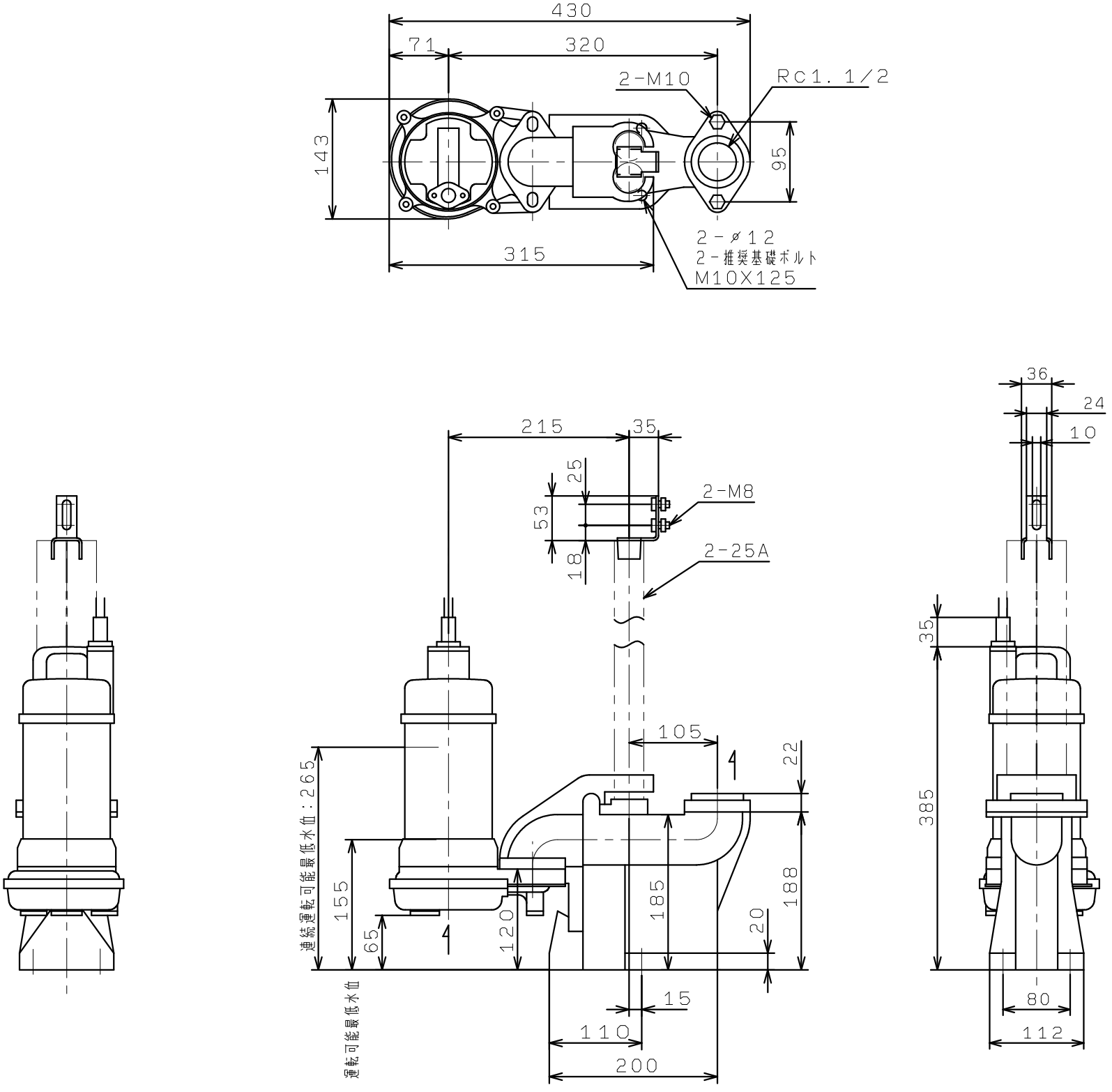
着脱装置付