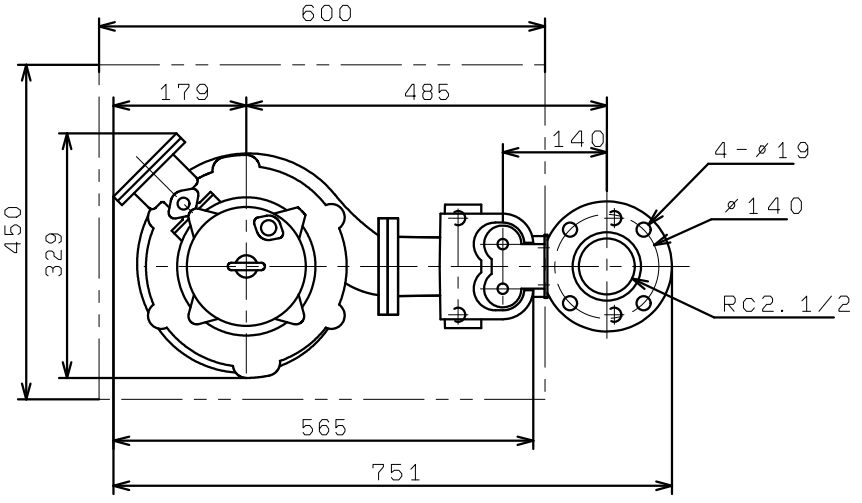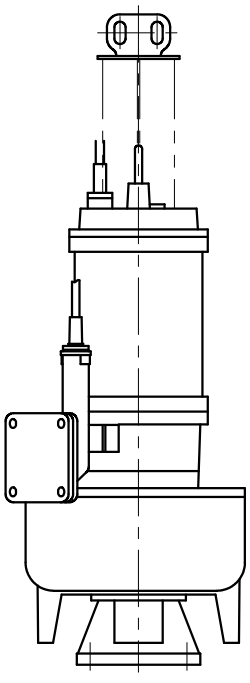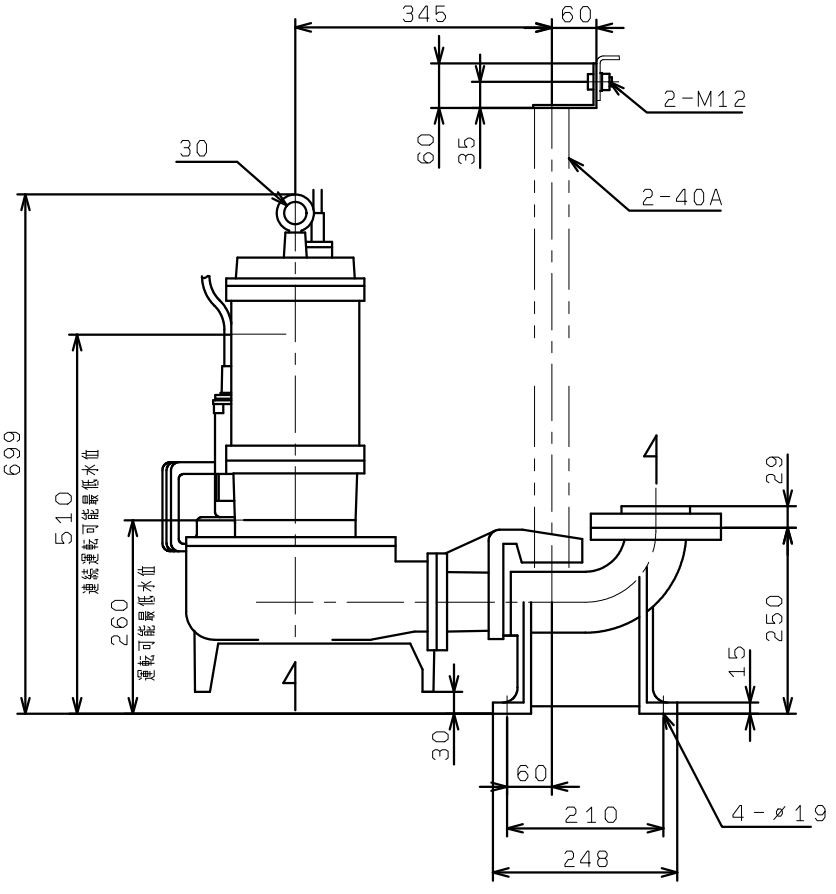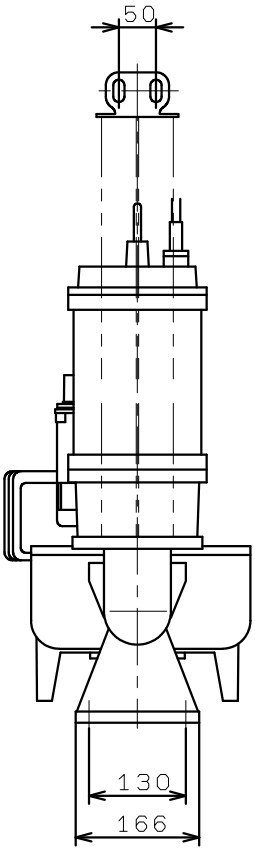VUS-655/656-3.7
着脱装置付
VC81, 82, 83