VUS-505/506-0.4T/0.75

着脱装置付
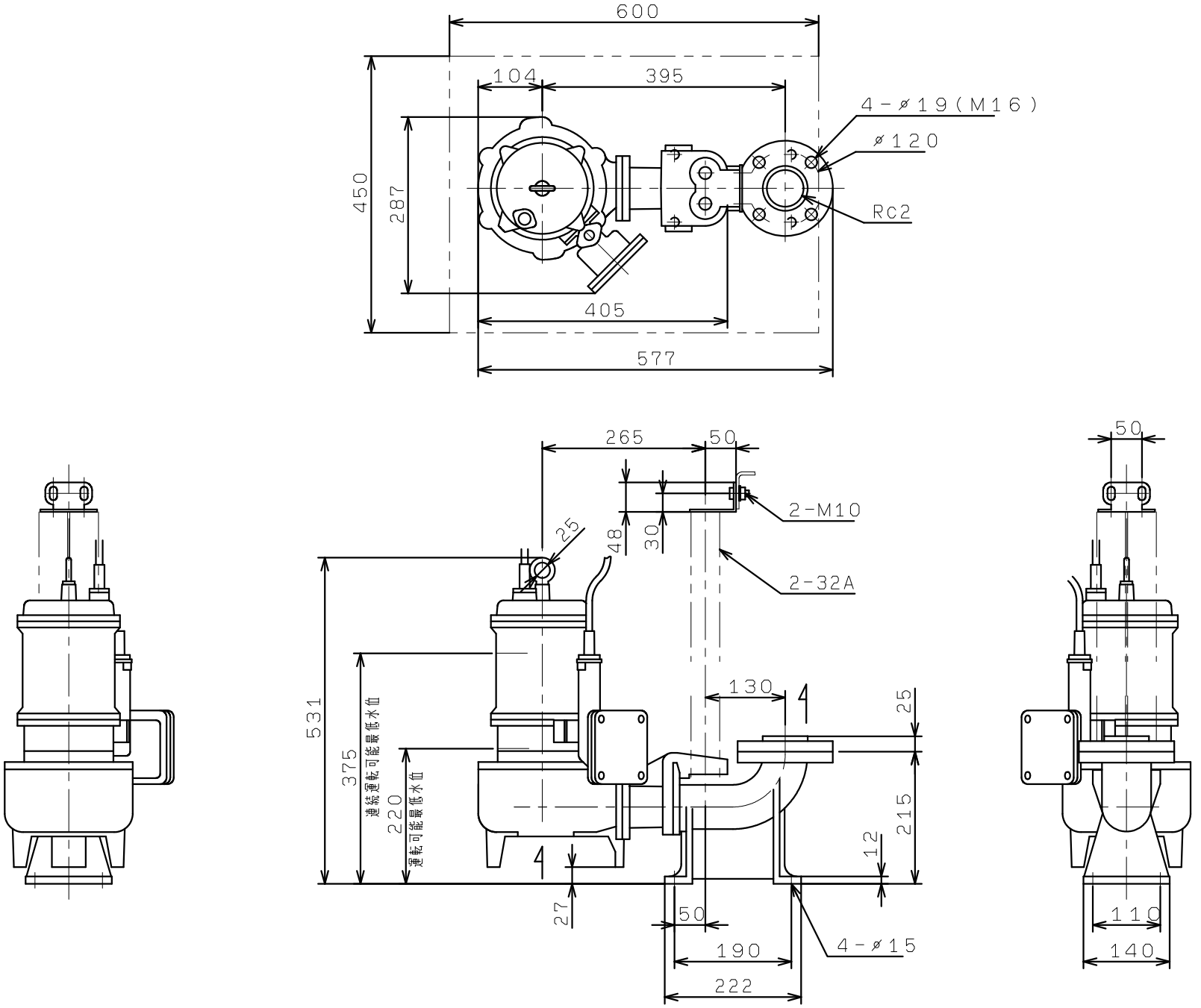
VC81, 82, 83