UF3T-450S
UF3T-450T
UF3T-600S
UF3T-600T
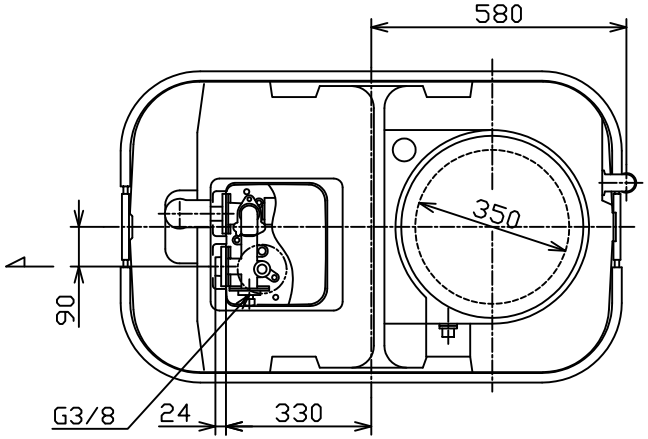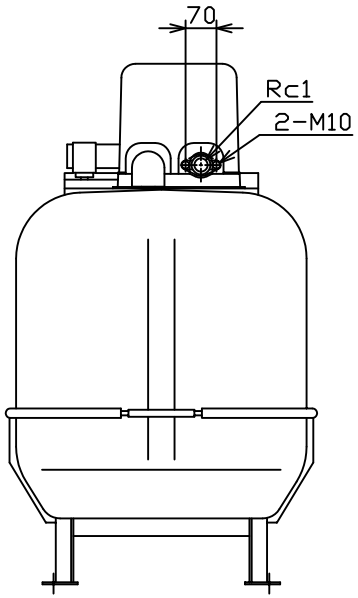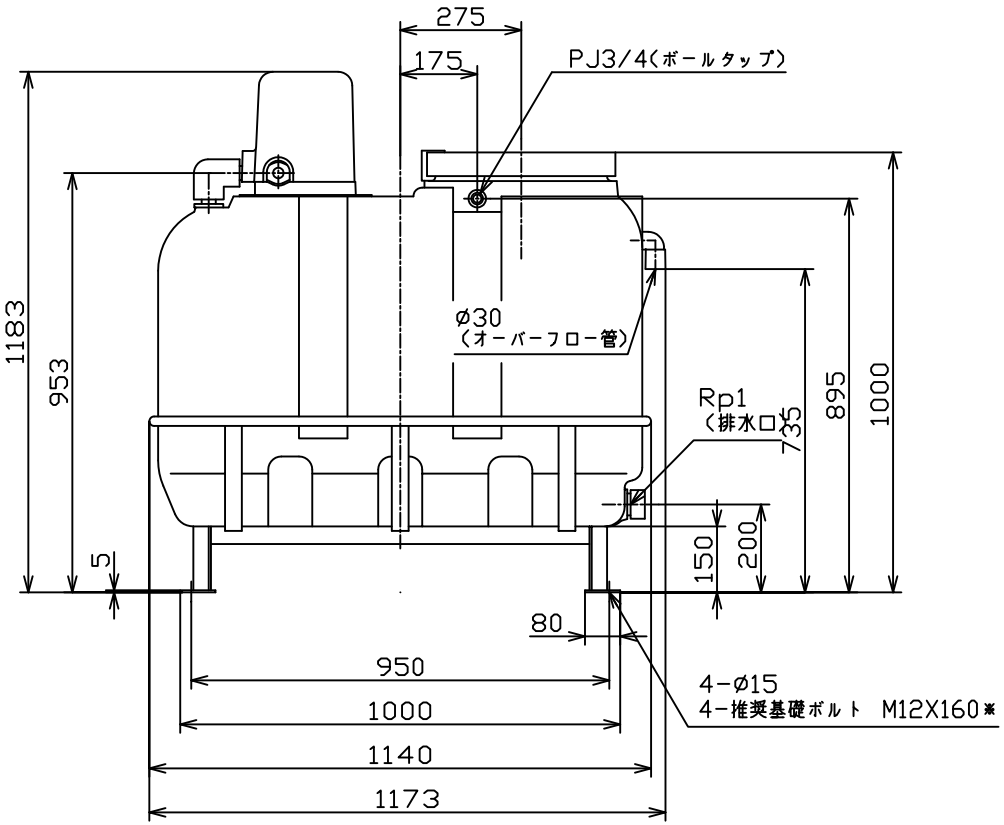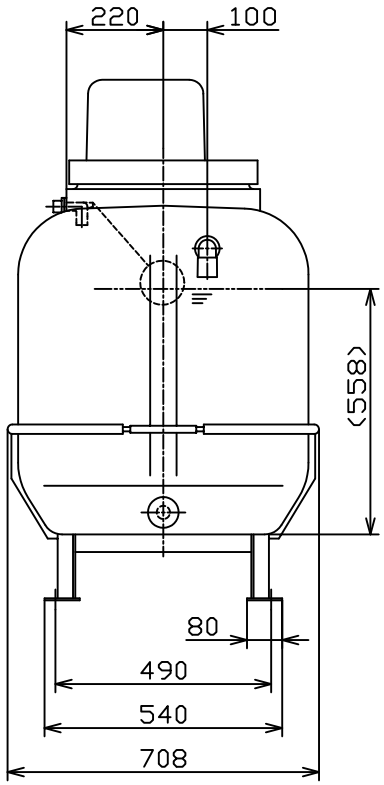
TAB-30U-B付