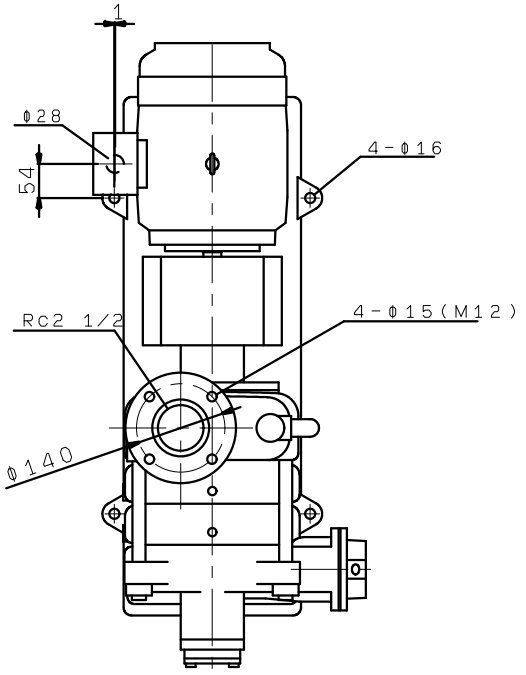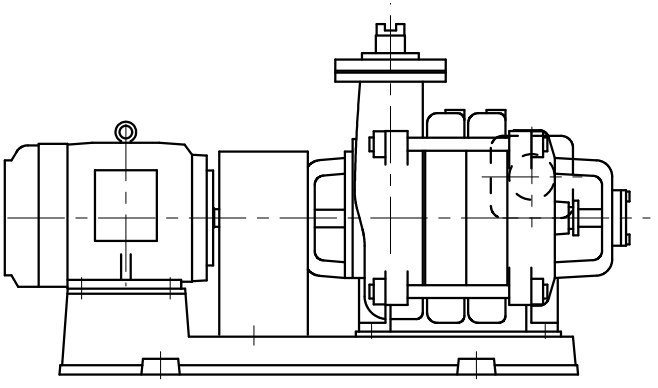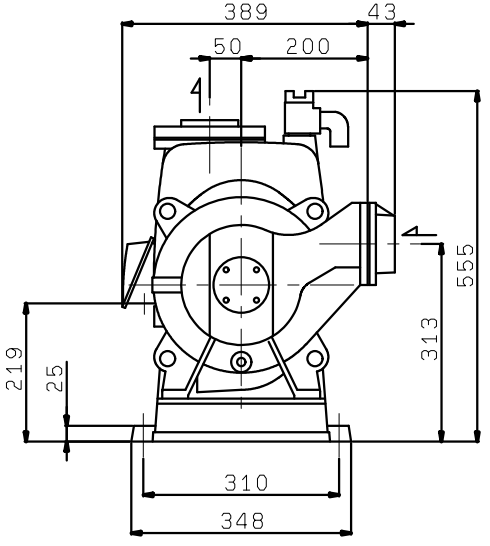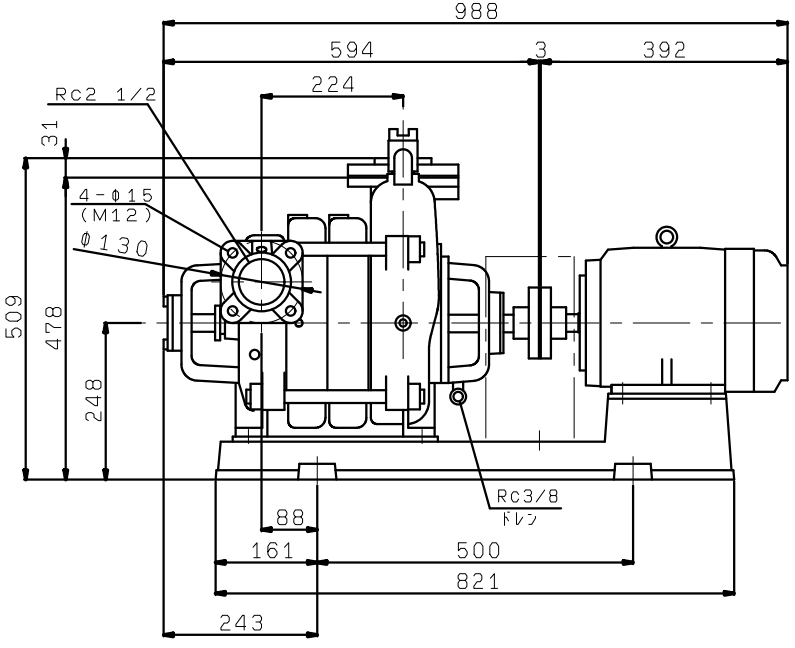TVS655X3ME3.7