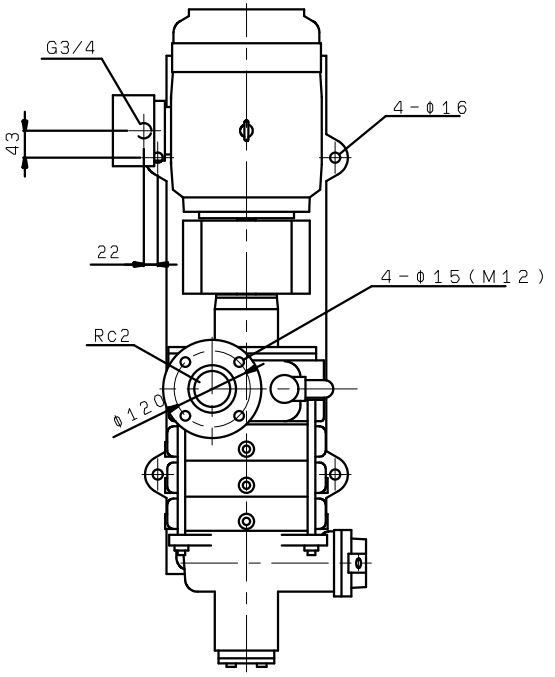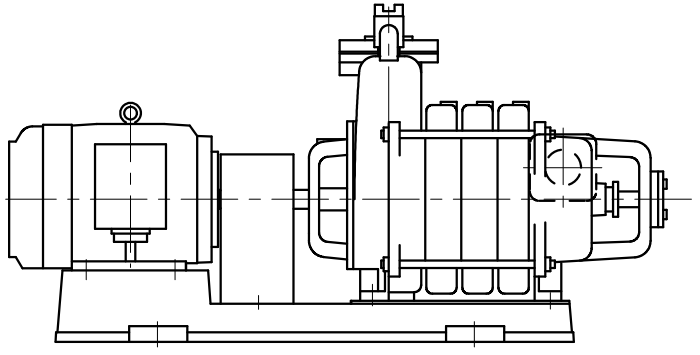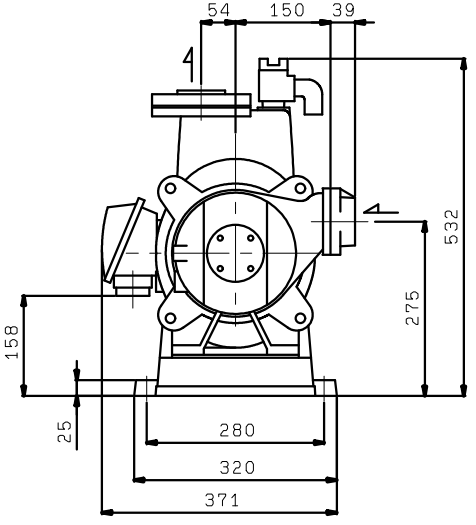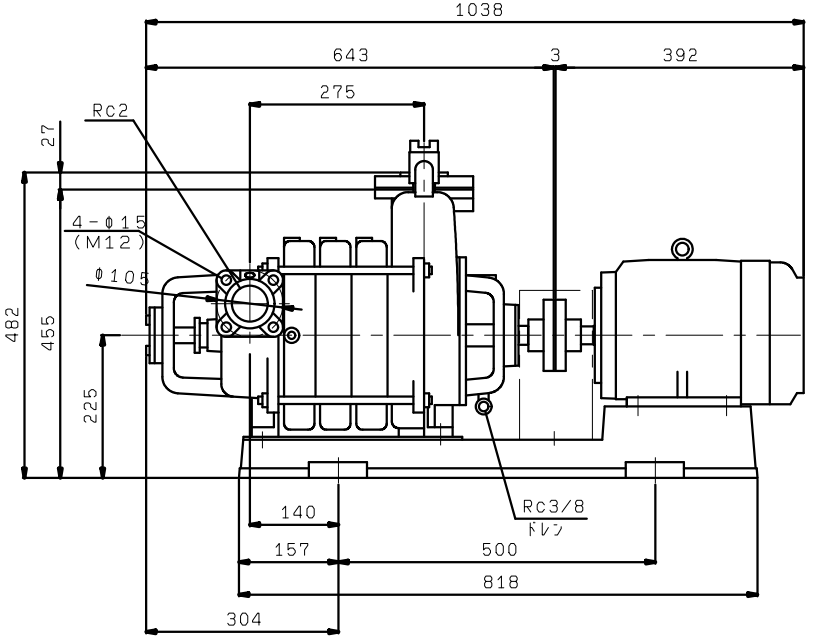TVS505X4ME3.7
(VC30)