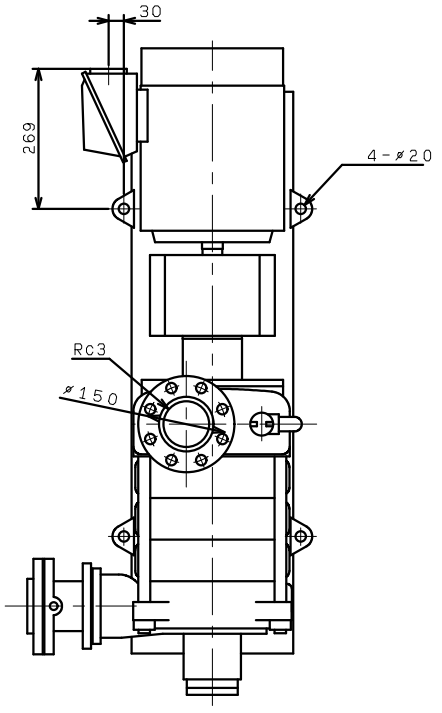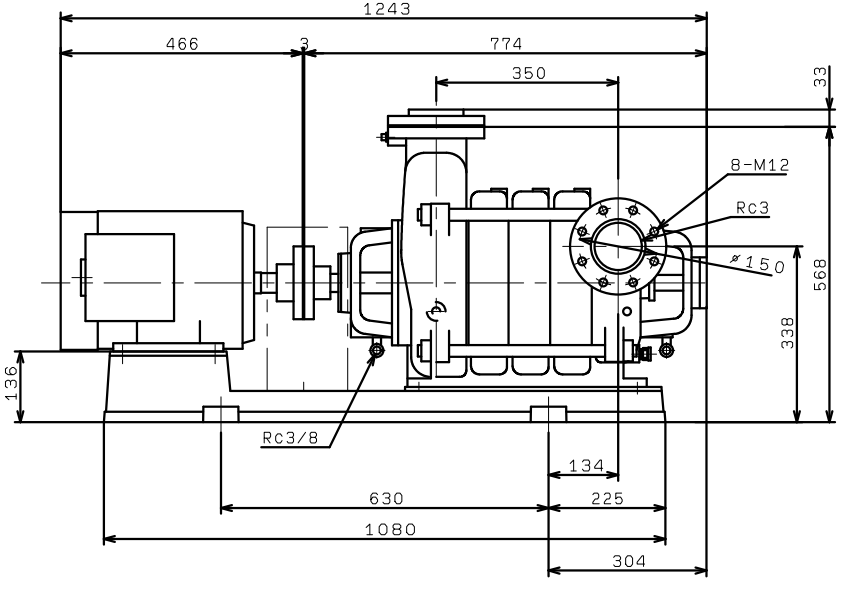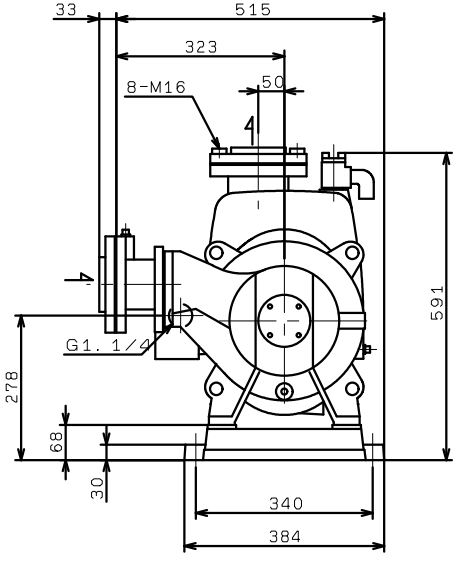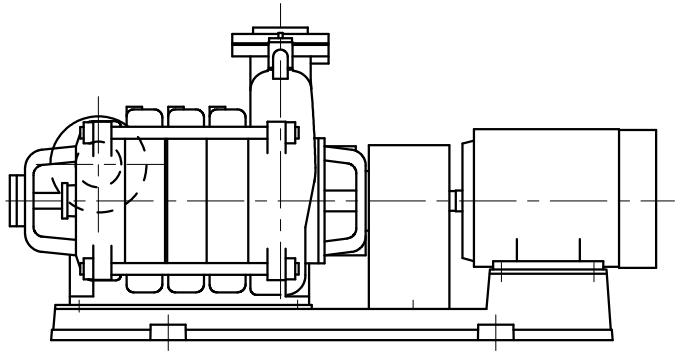TVS-R805X4ME7.5
(VC30)