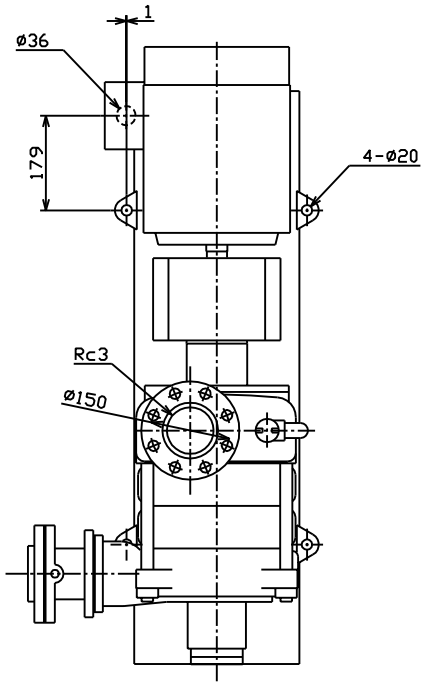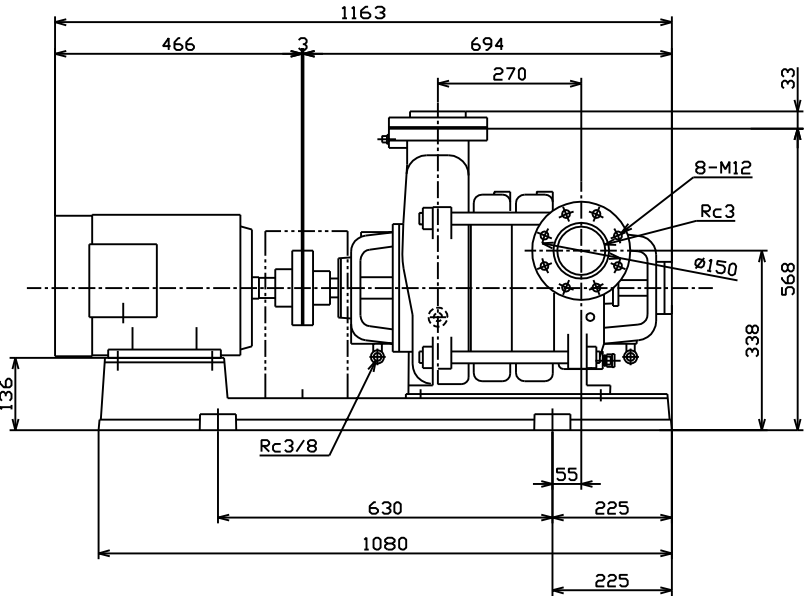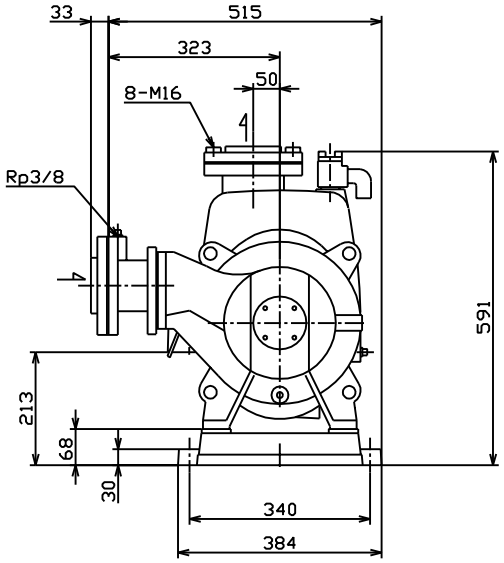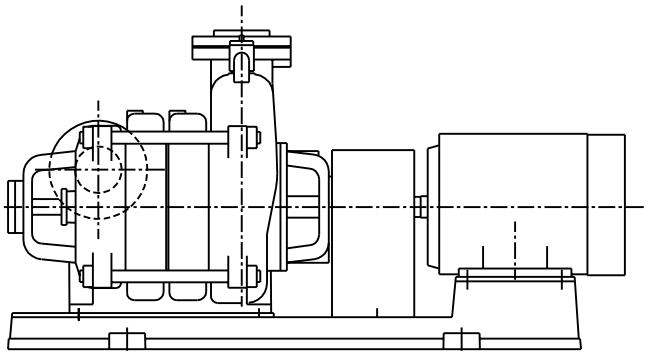TVS-R805X3ME7.5