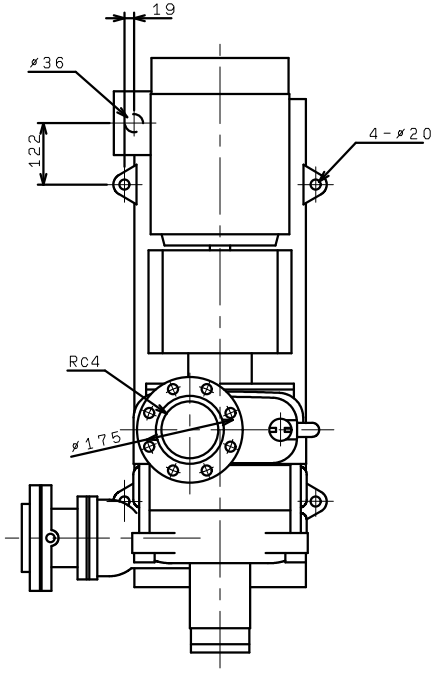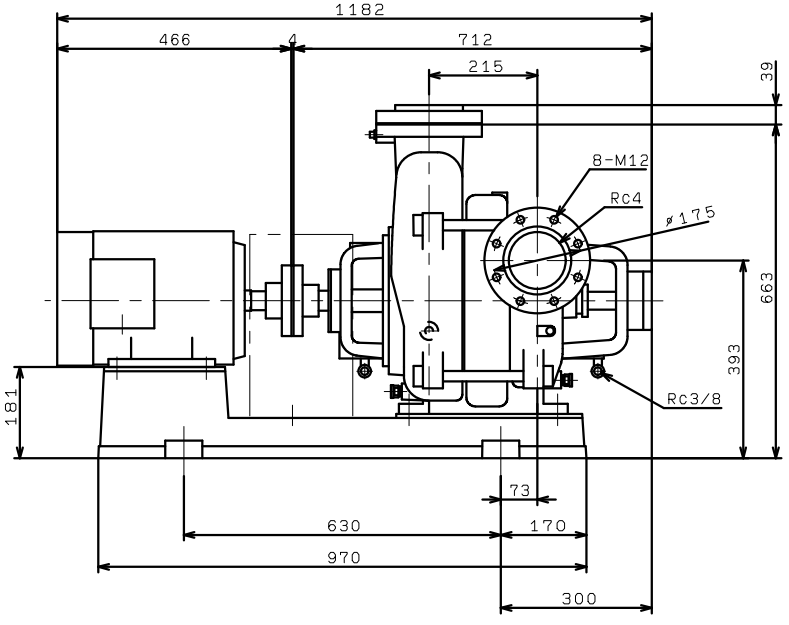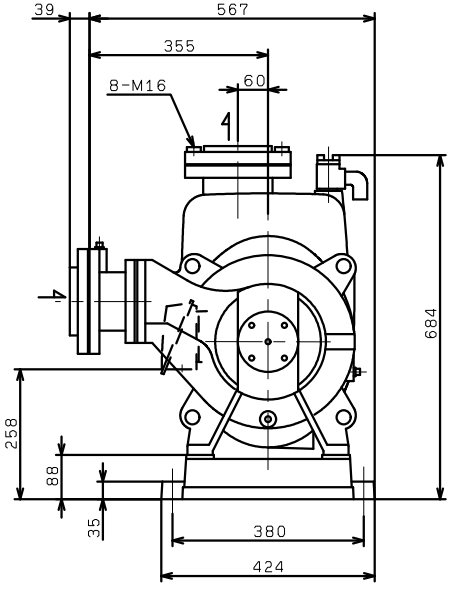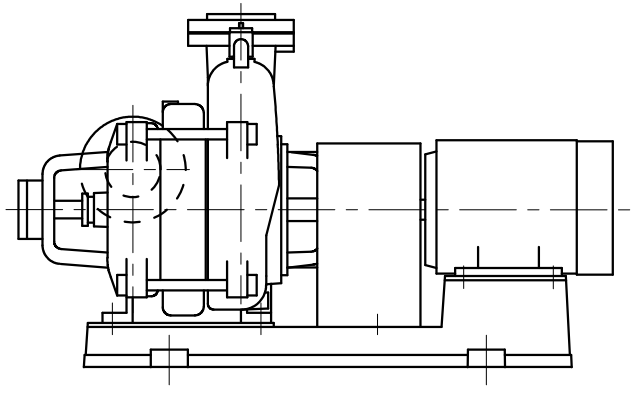TVS-R1005X2ME7.5