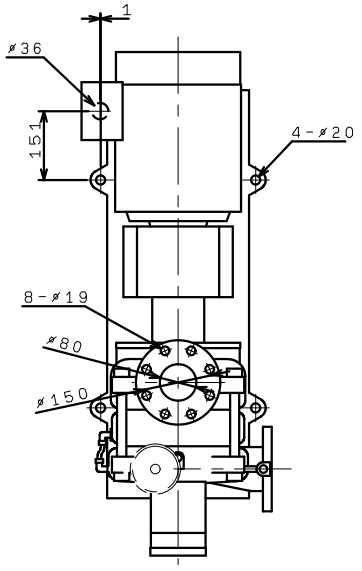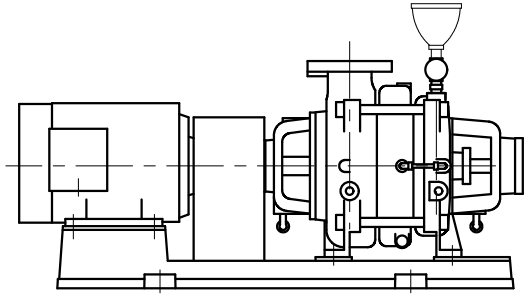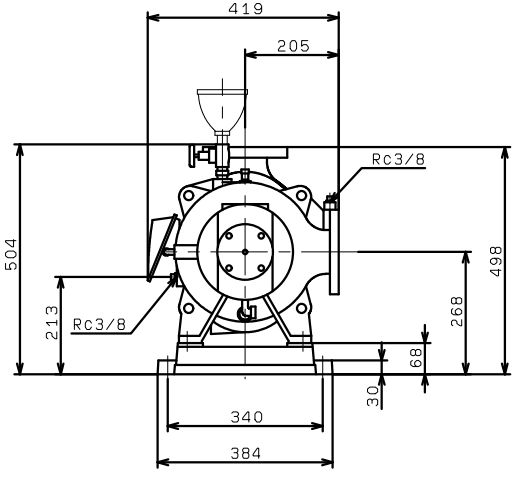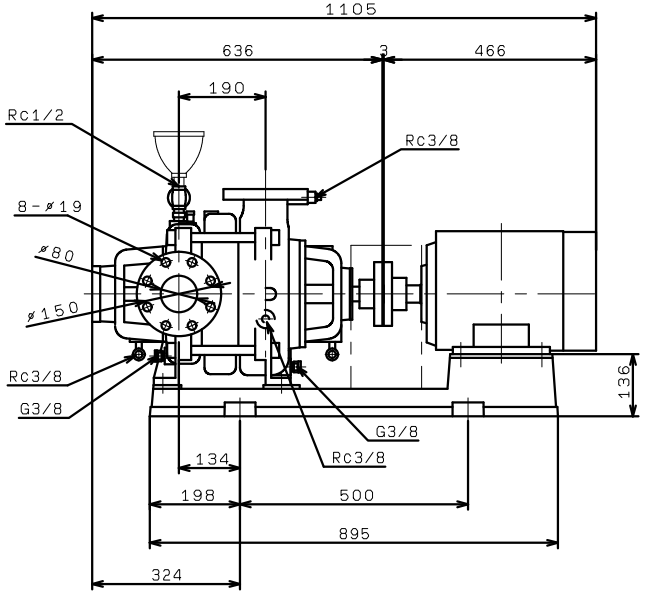TN806X2ME7.5