TN1255X4ME37
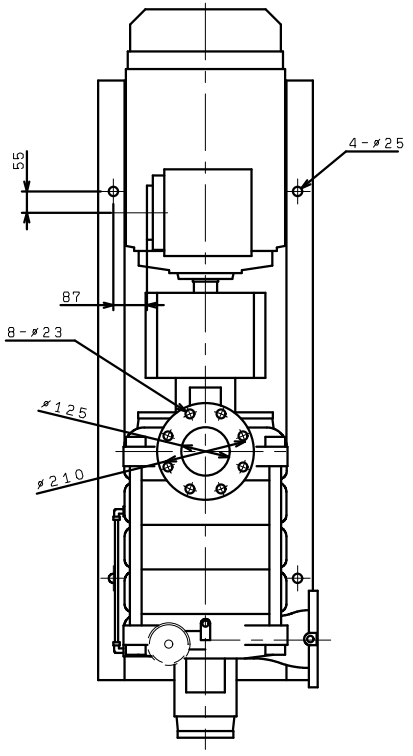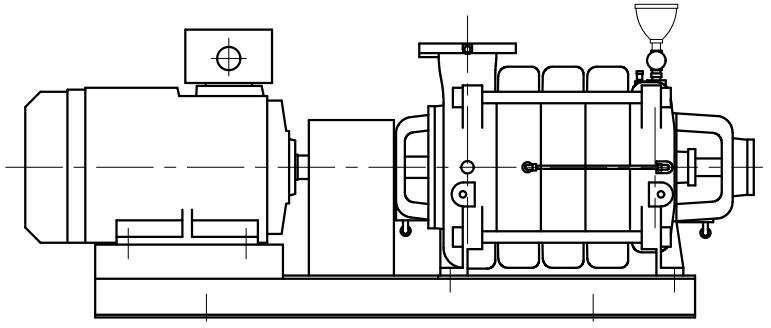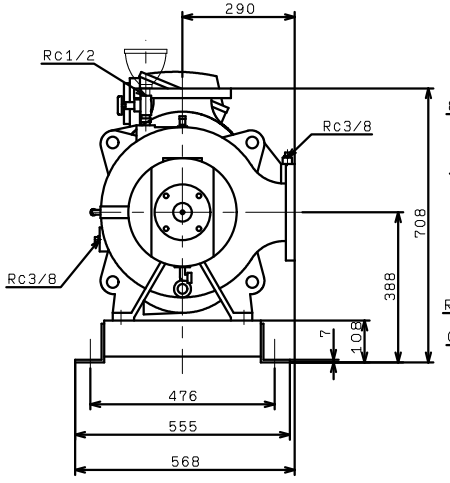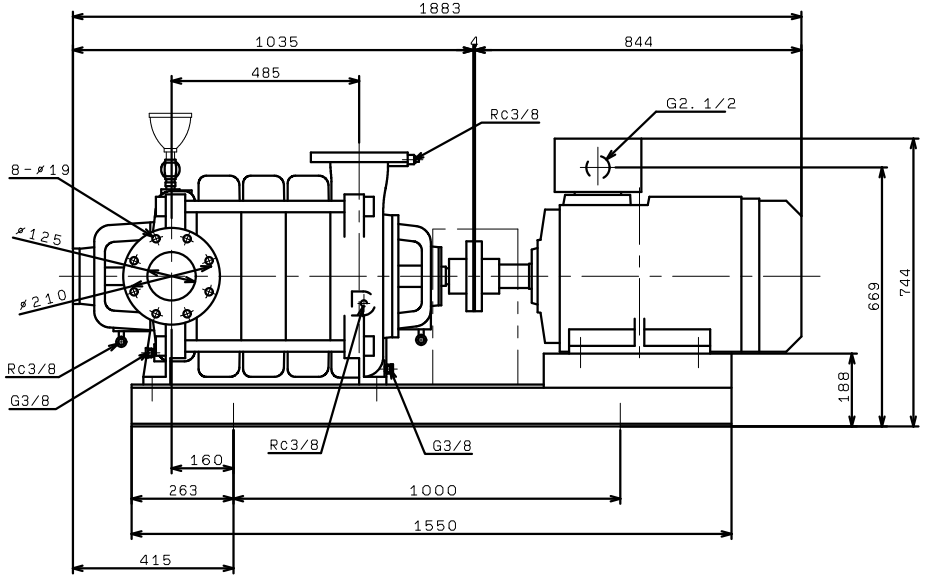
(VC30)