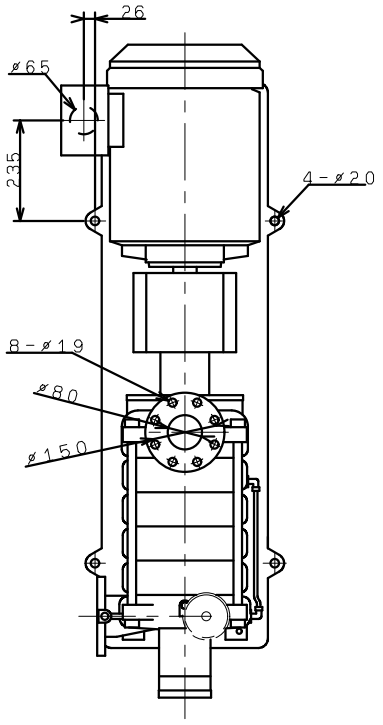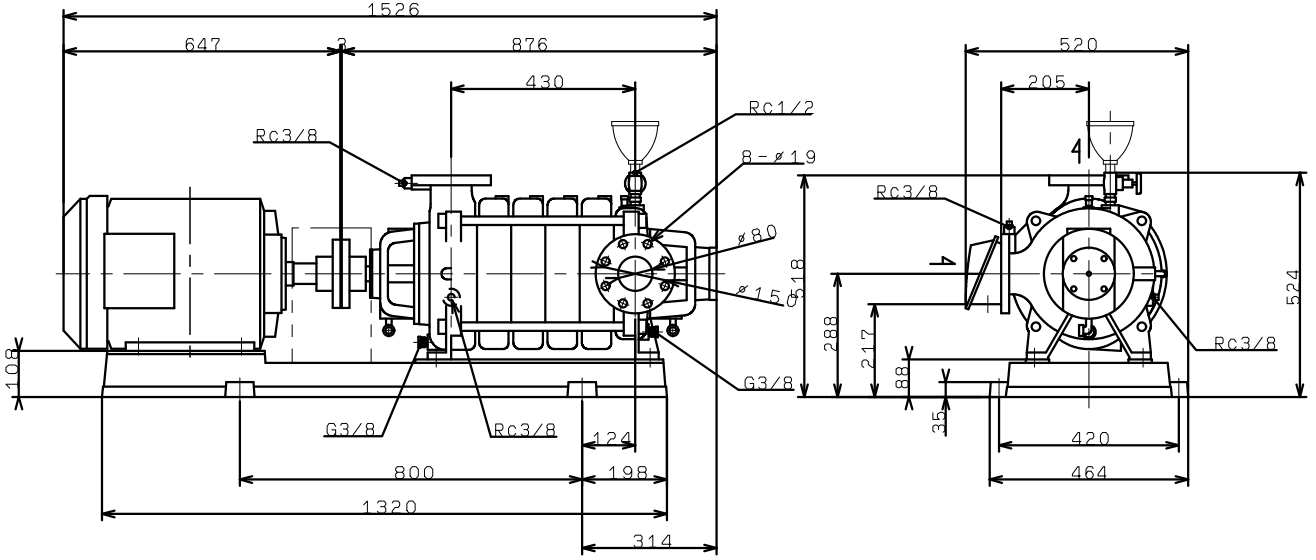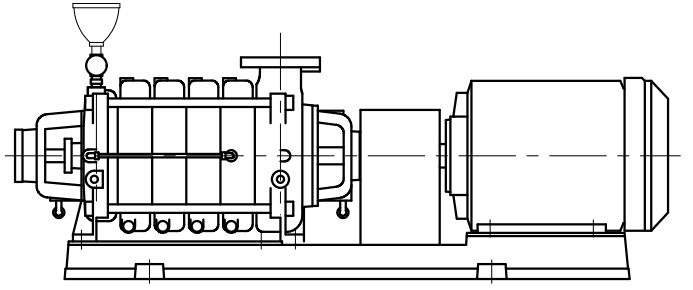TN-R806X5ME18