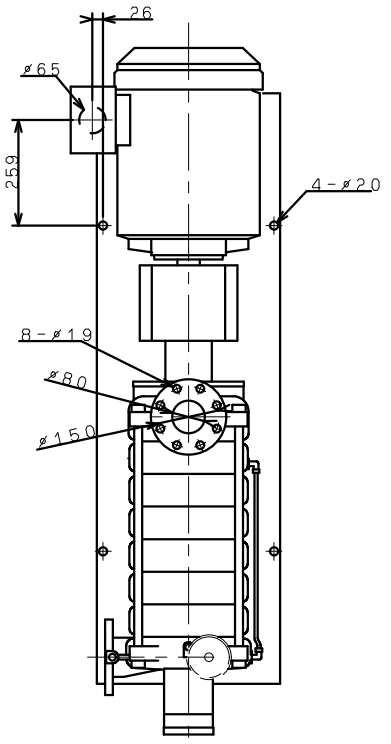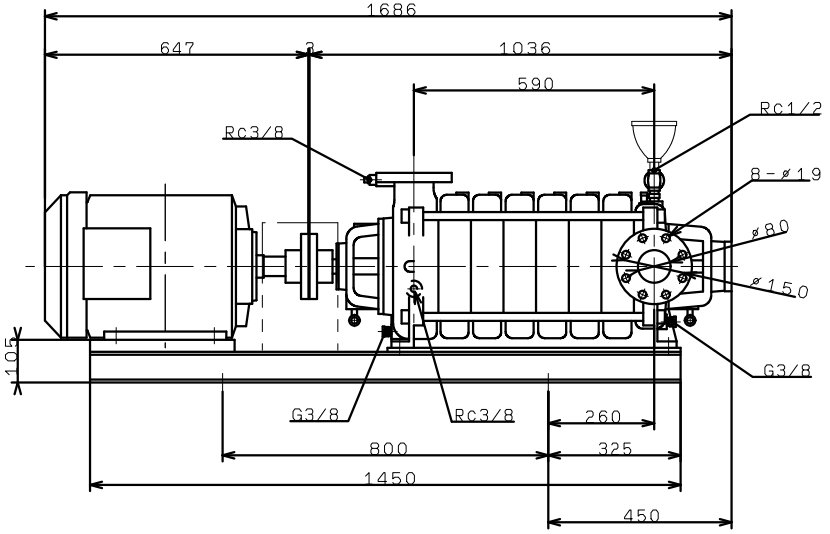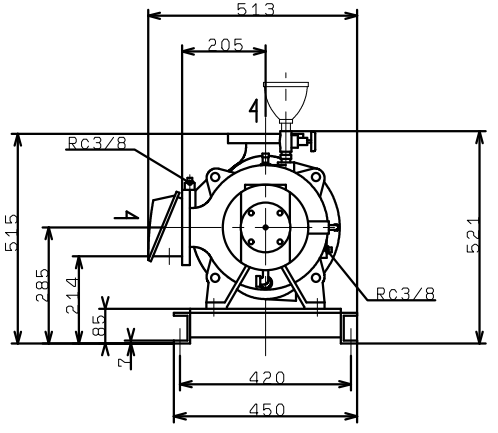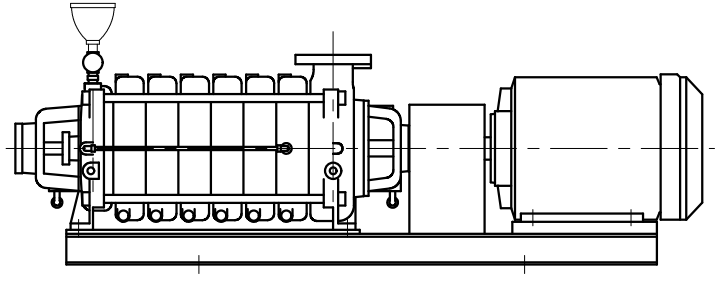# TN-R805X7ME18