TN-R1505X2ME37

TN-R1505X2ME45
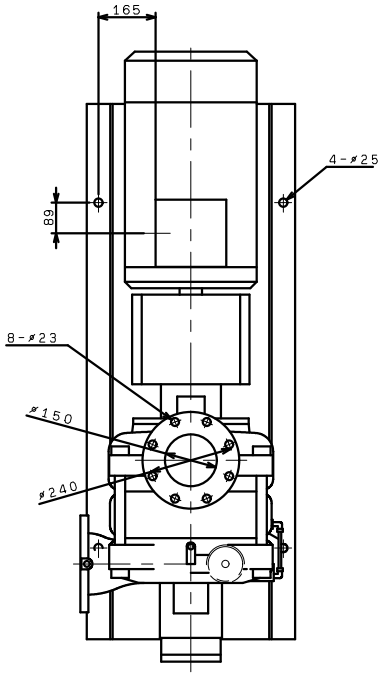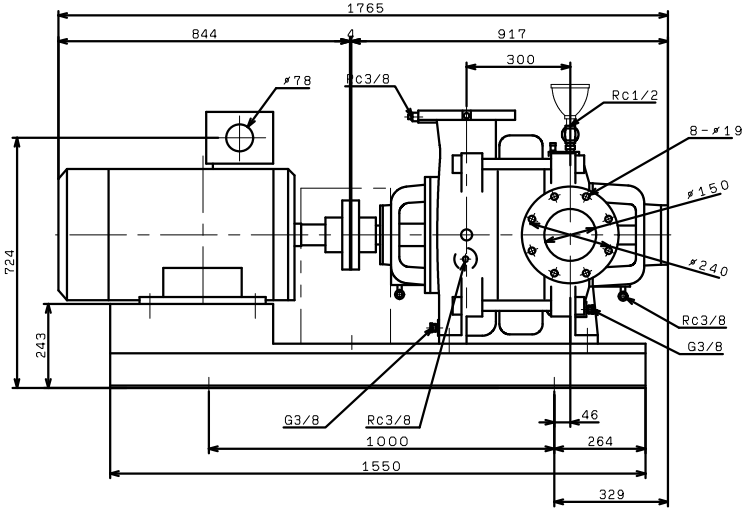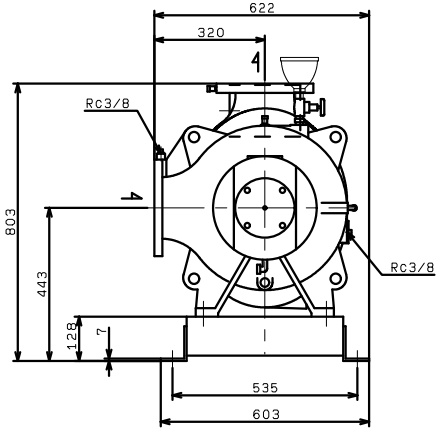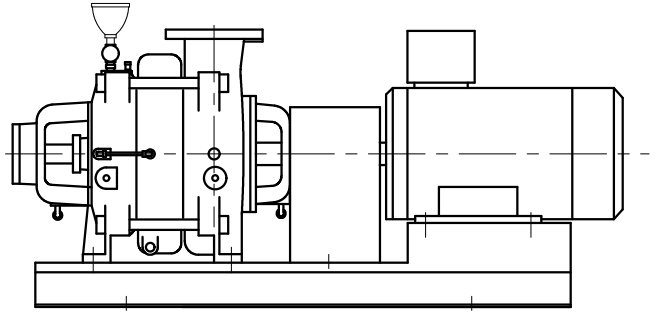
TN-R1506X2ME45