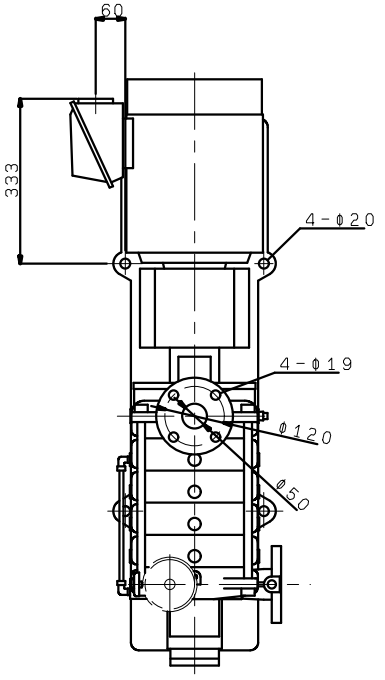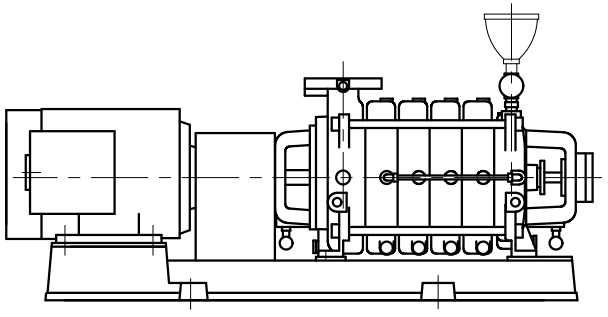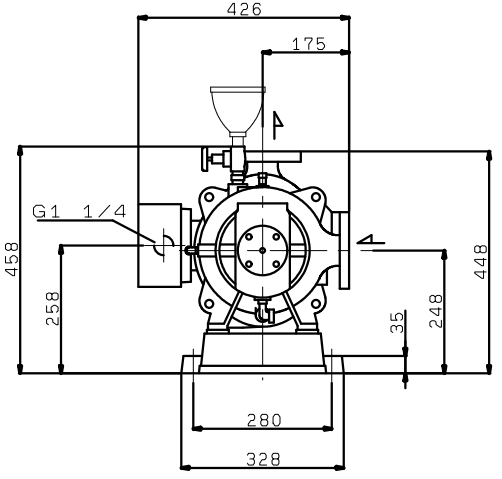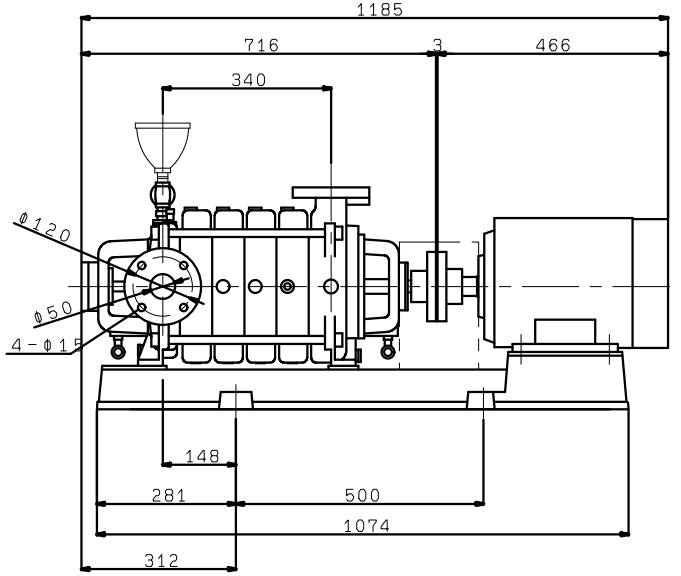TK506X5ME7.5
TKN506X5ME7.5
(VC30)