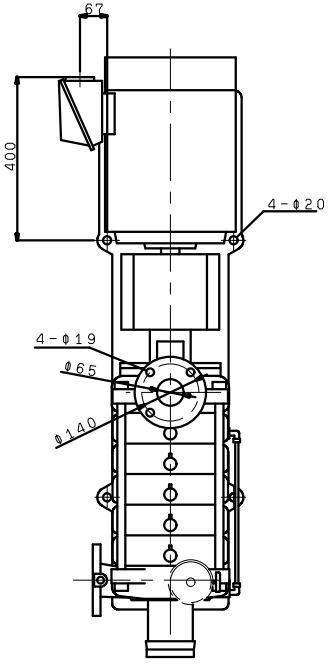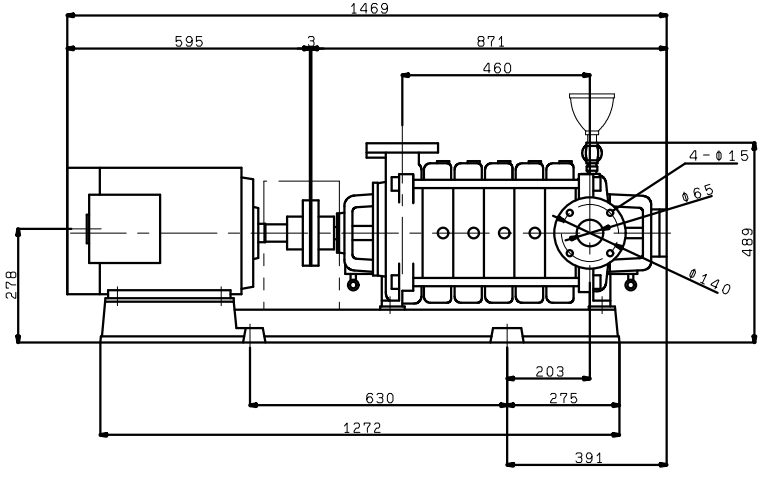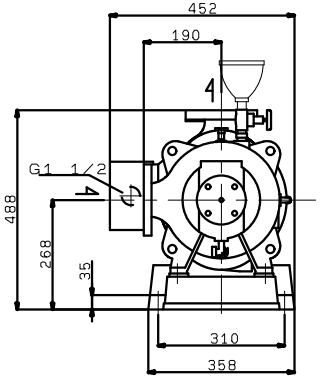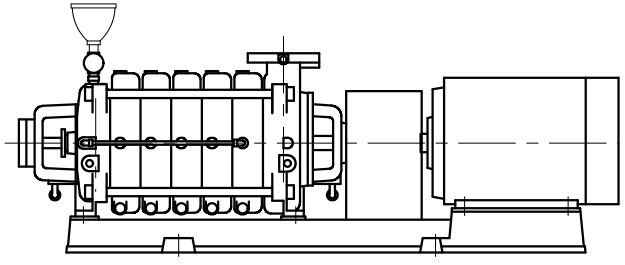TK-R656X6ME15
TKN-R656X6ME15
(VC30)