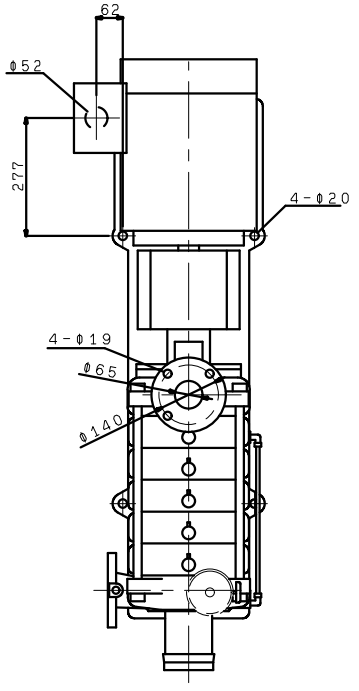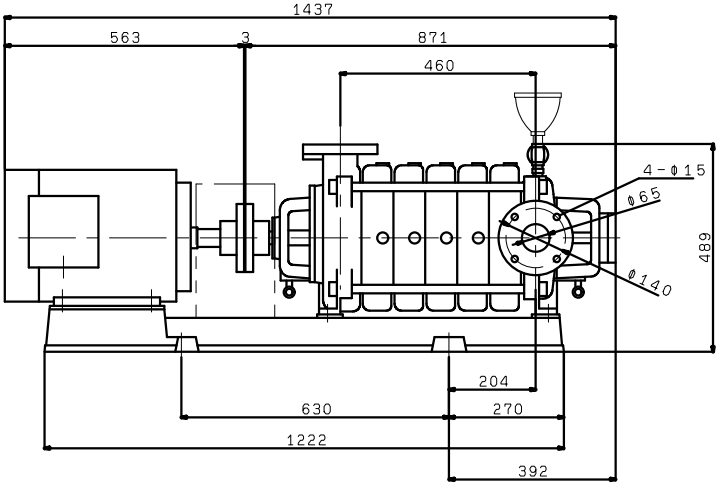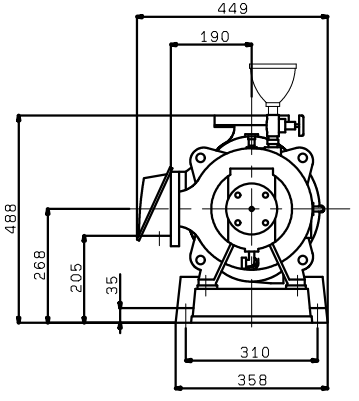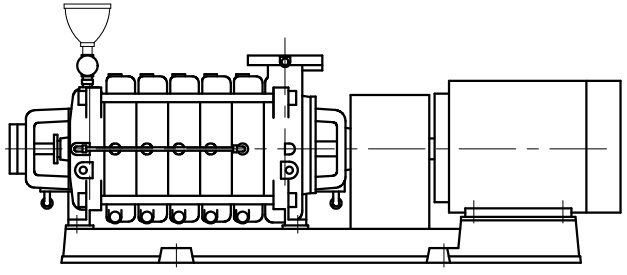TK-R655X6ME11
TKN-R655X6ME11