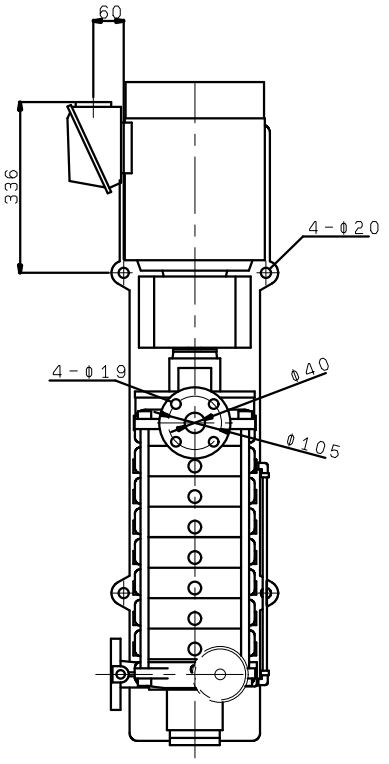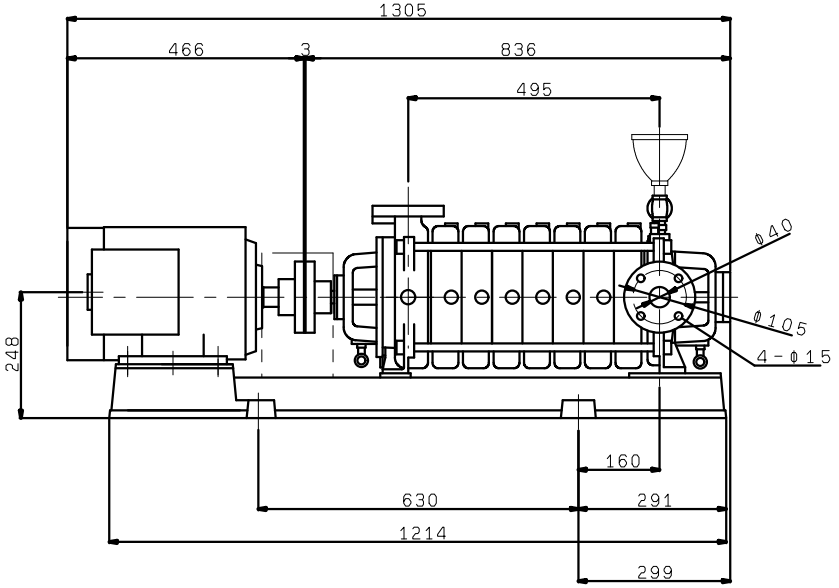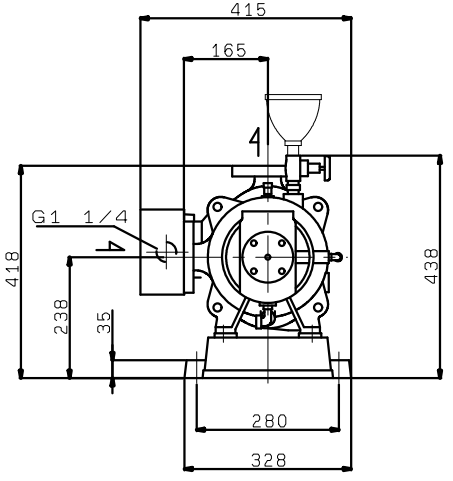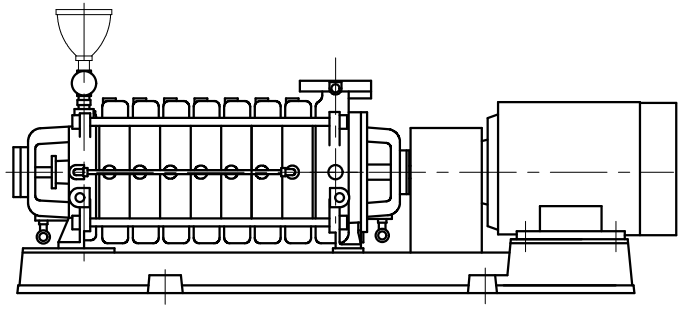TK-R406X8ME7.5
TKN-R406X8ME7.5
(VC30)