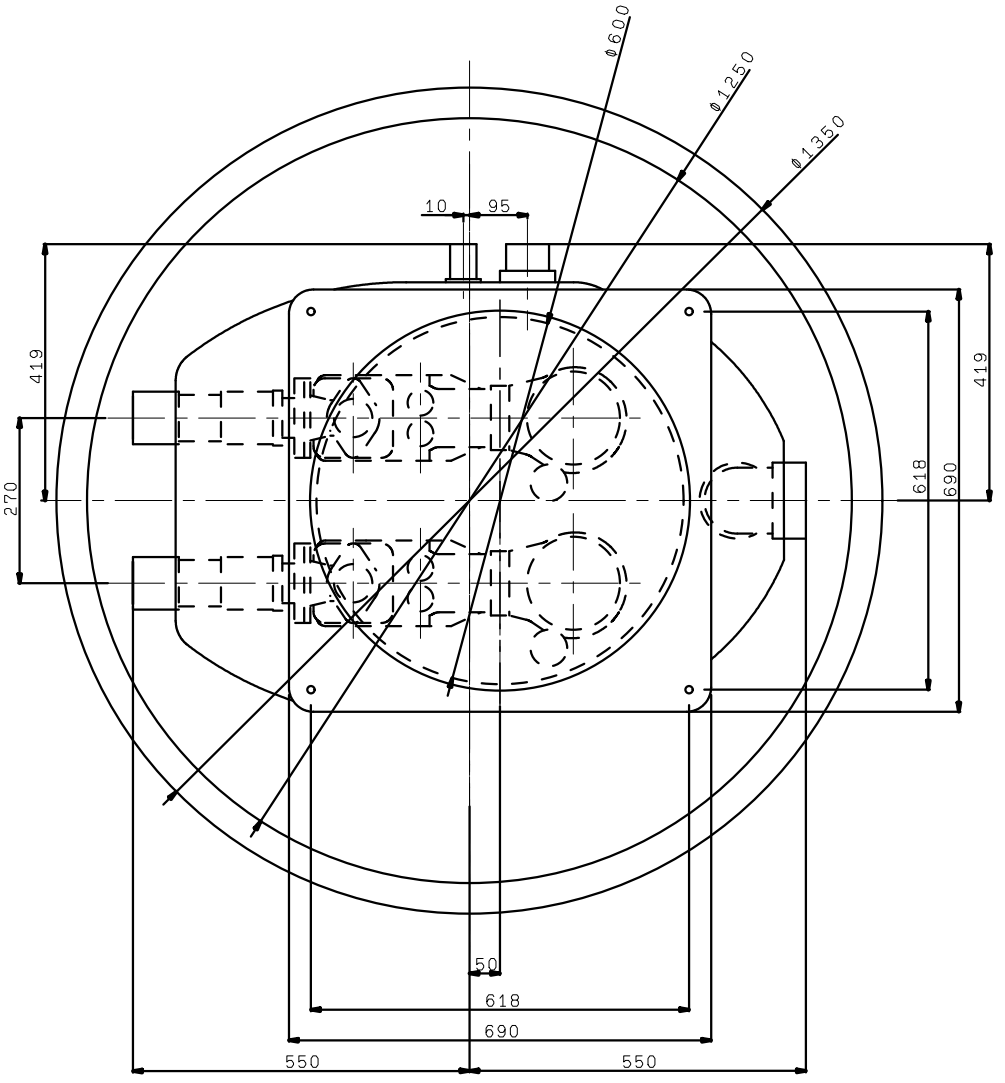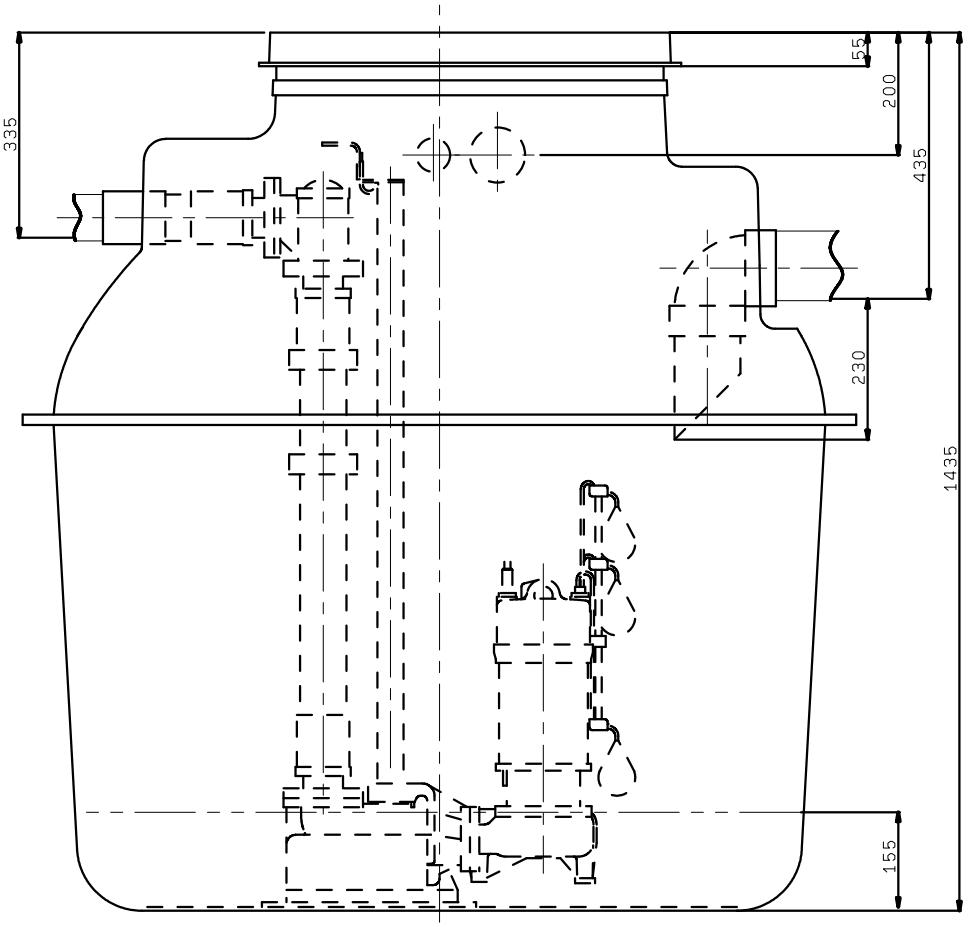TAZP2-100D65G