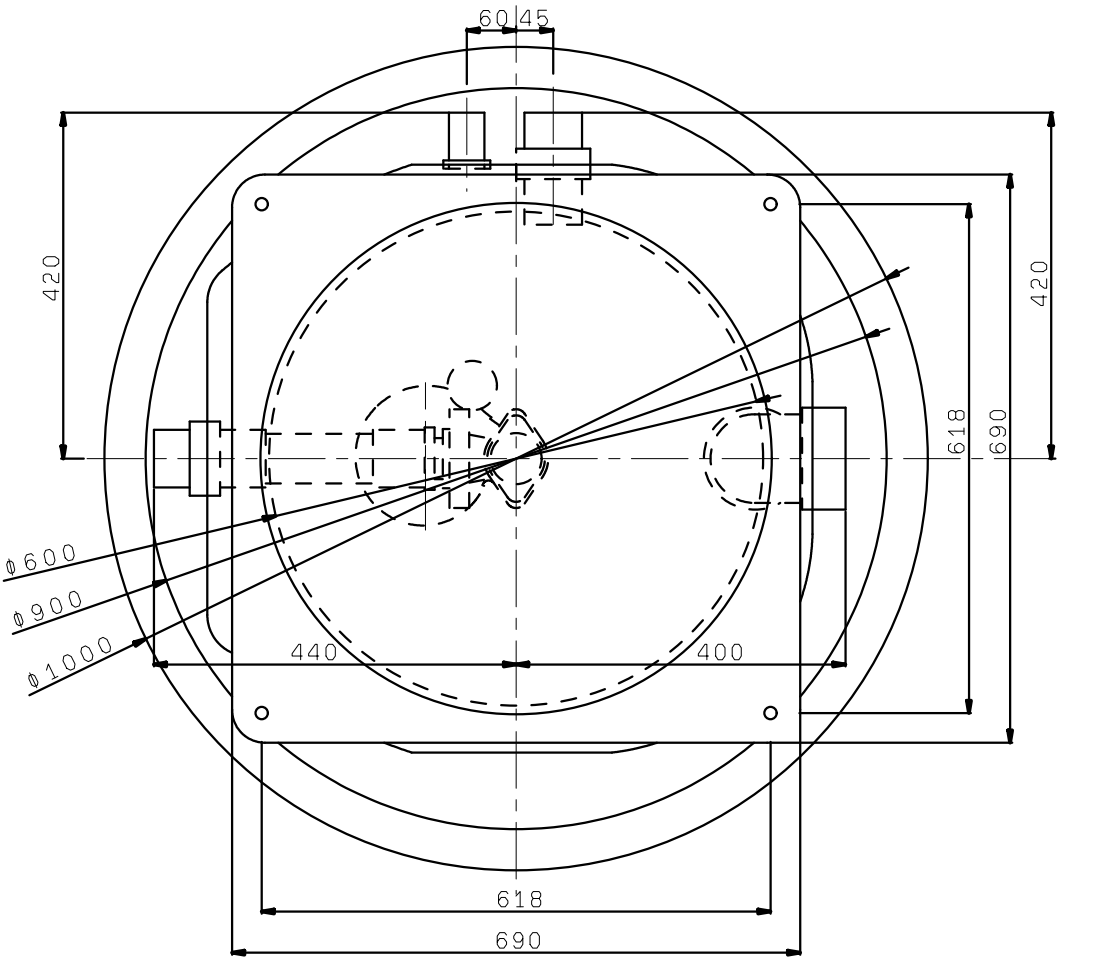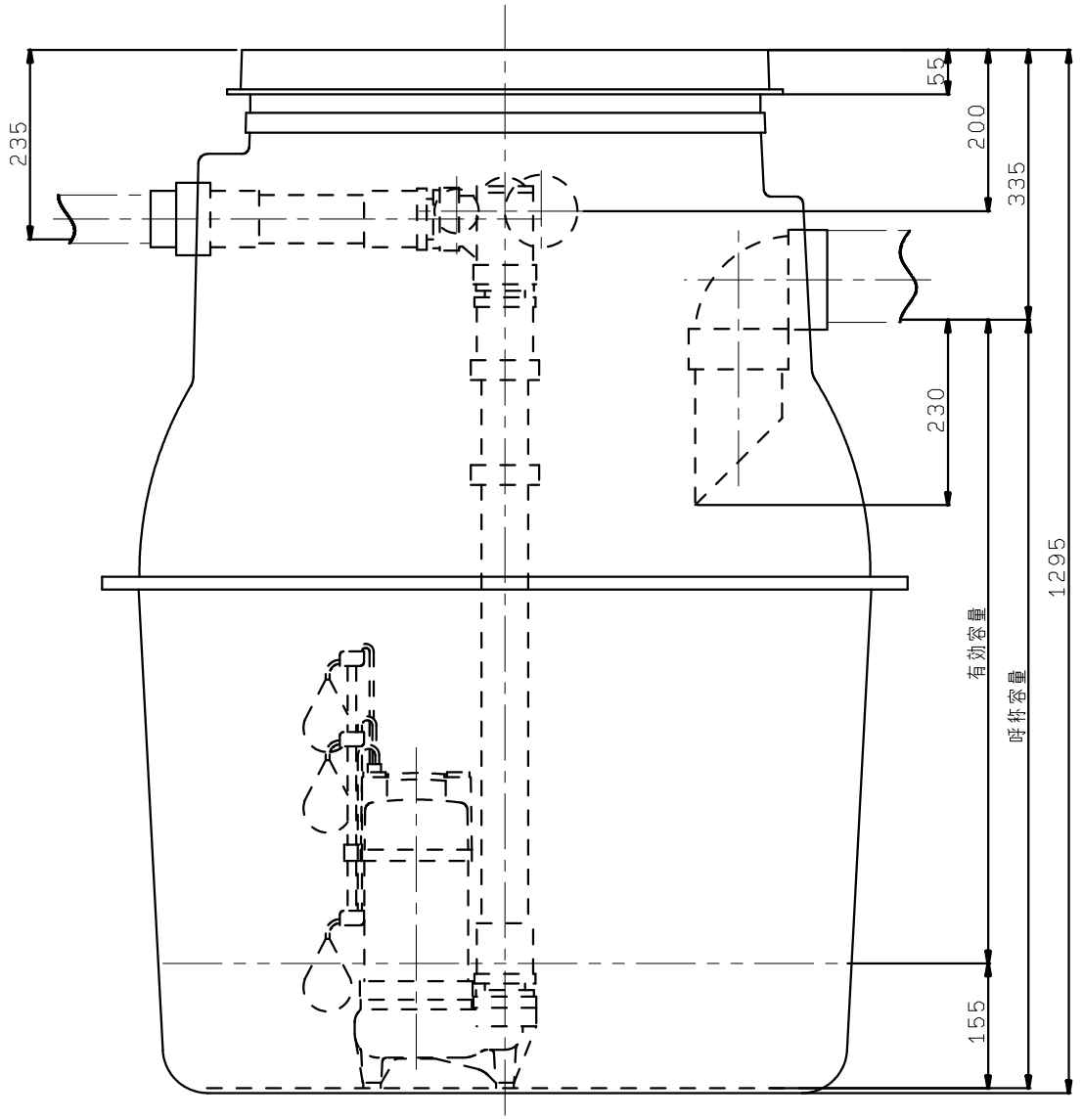TAZE2-50S50G