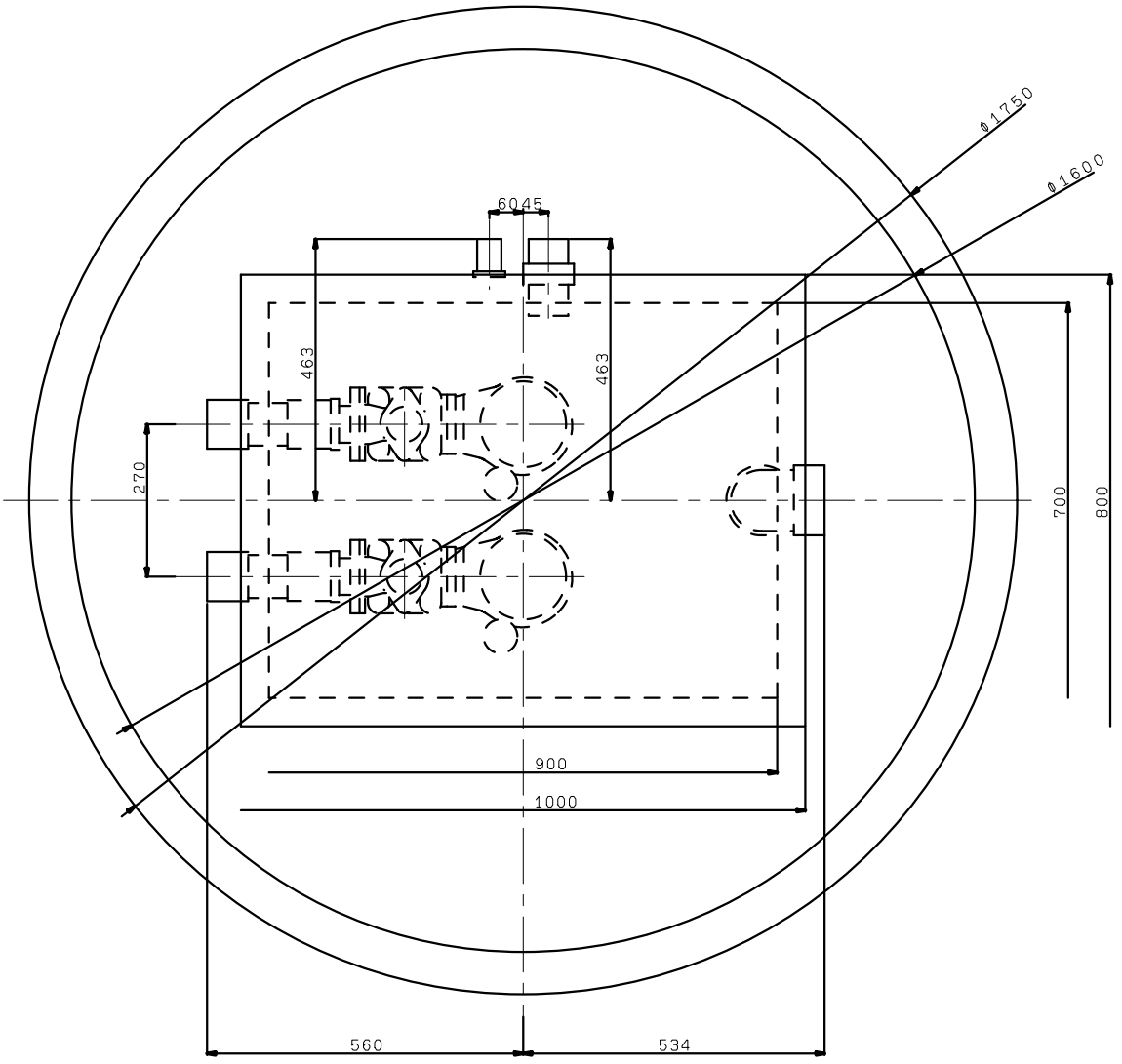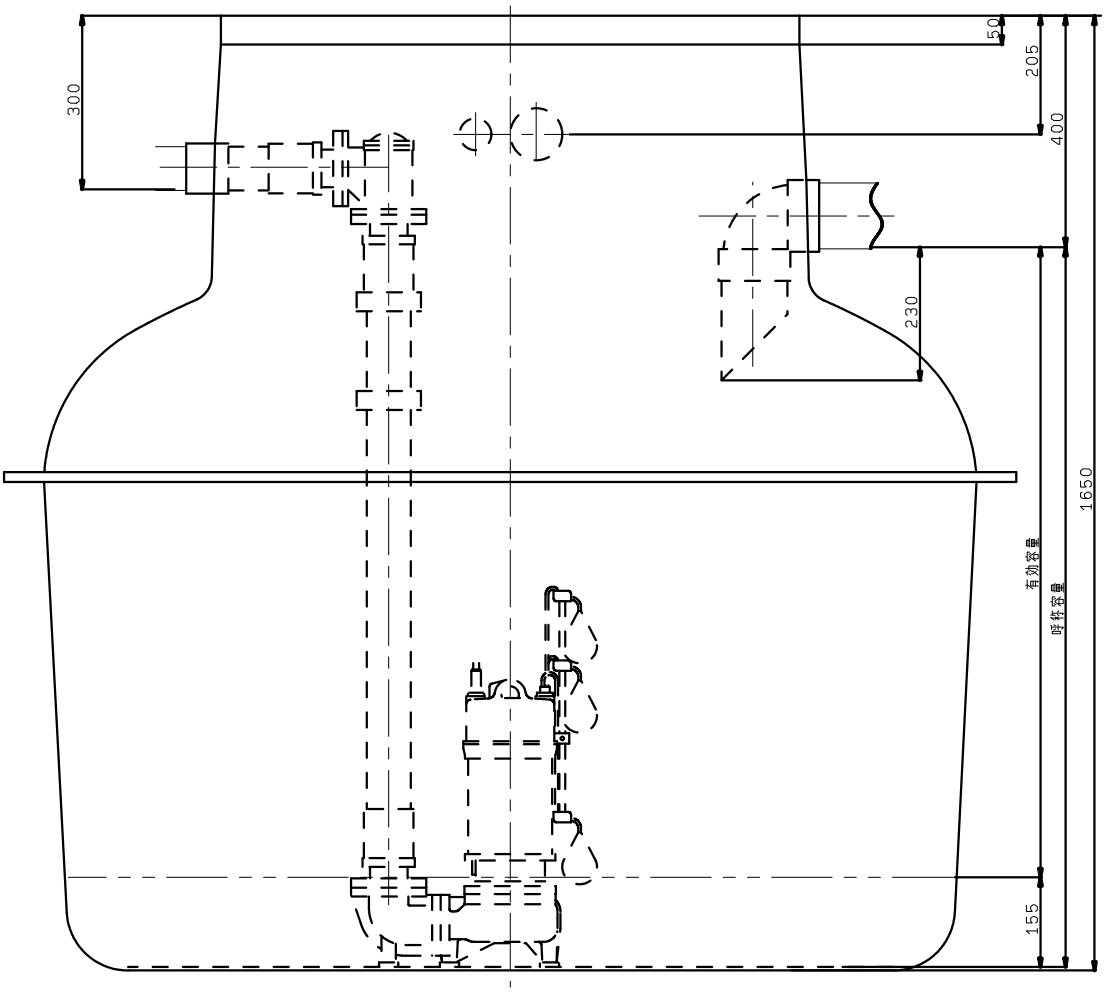TAZE2-200D65G