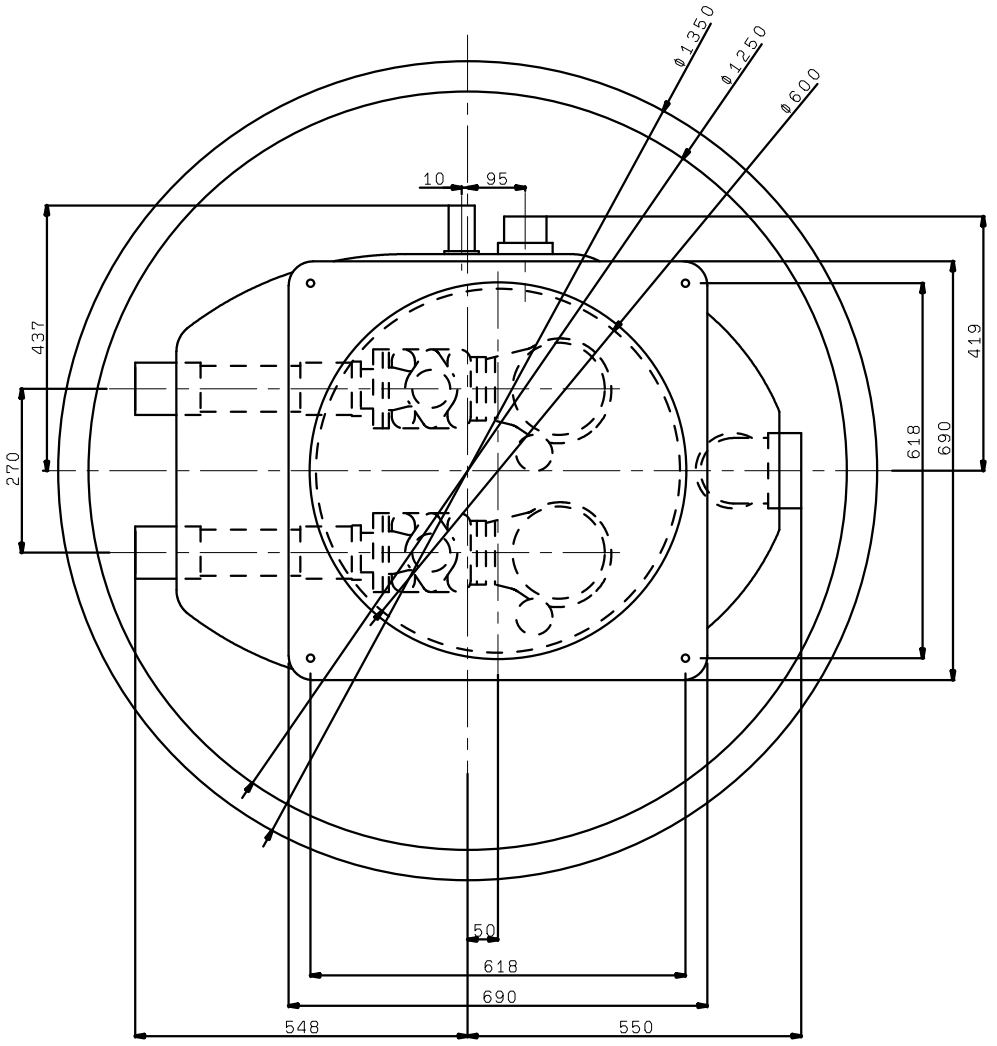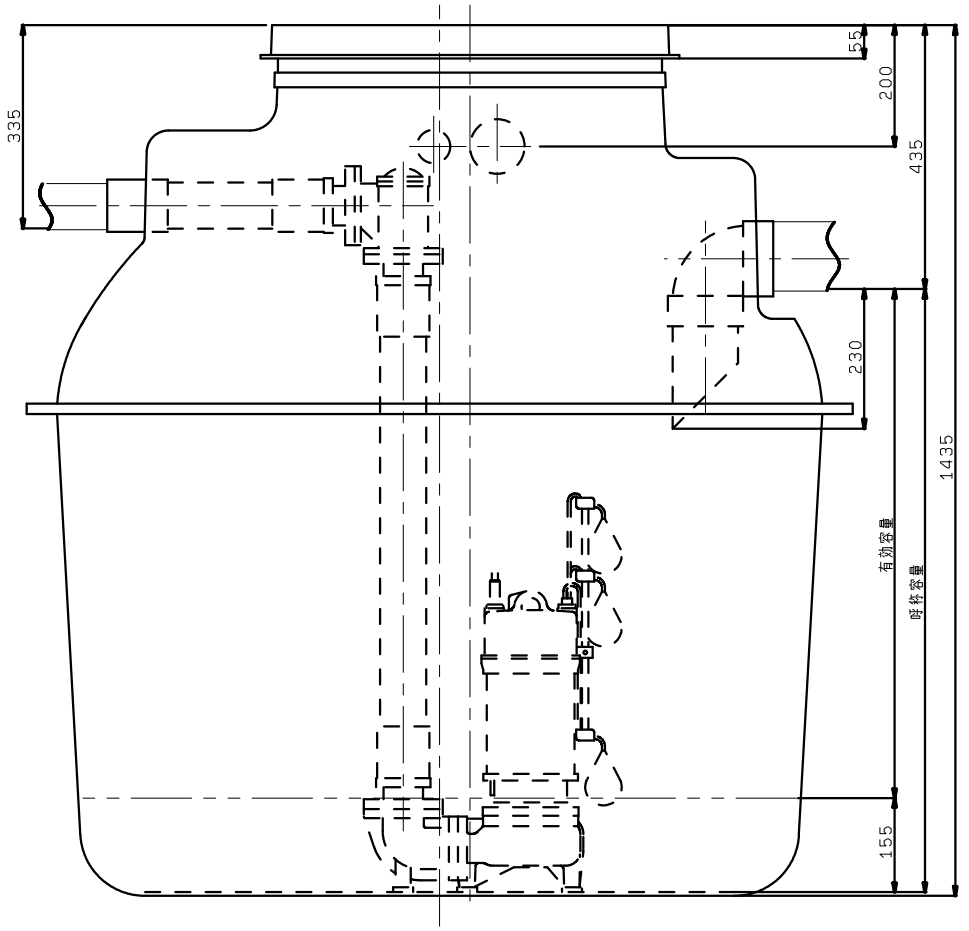TAZE2-100D65