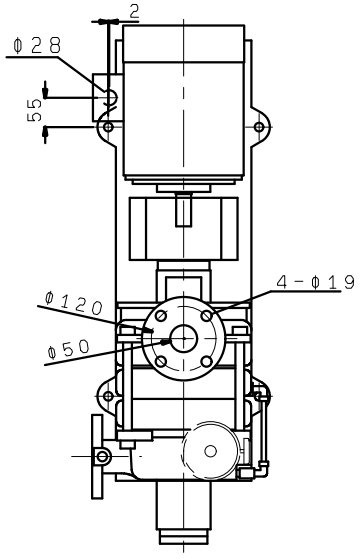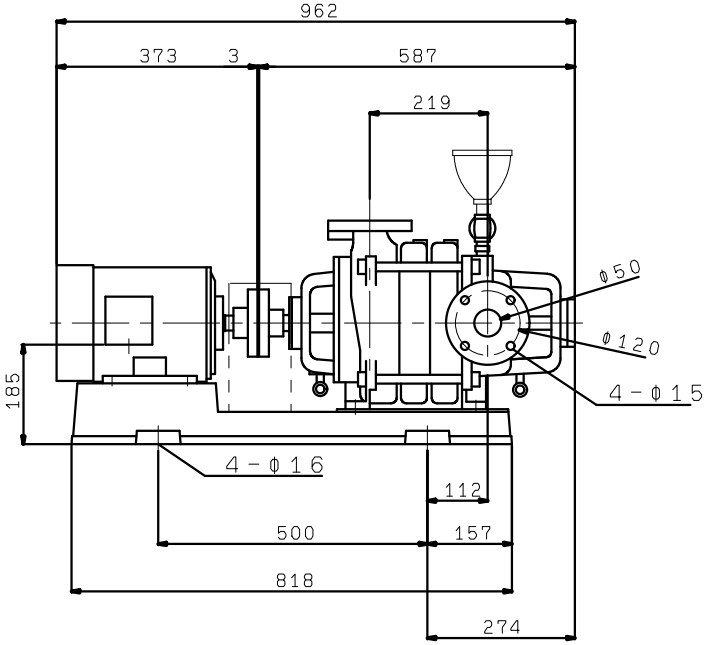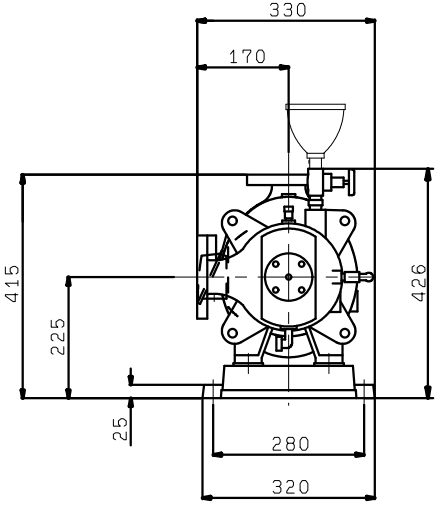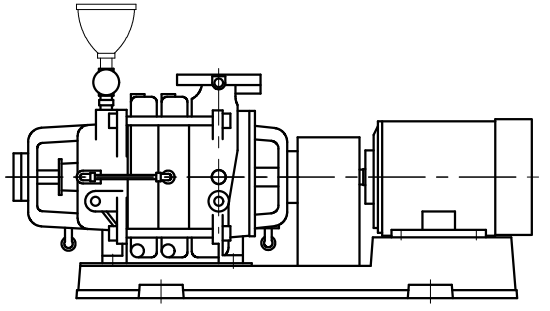T-R506X3ME3.7