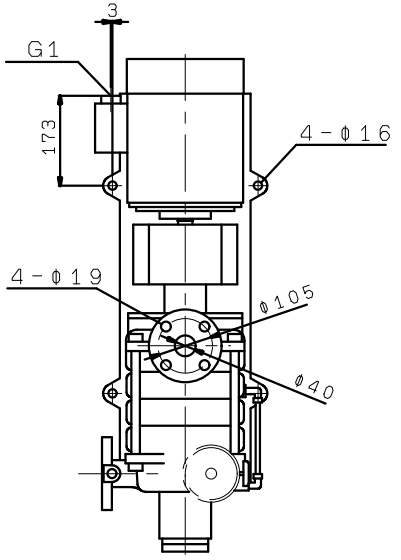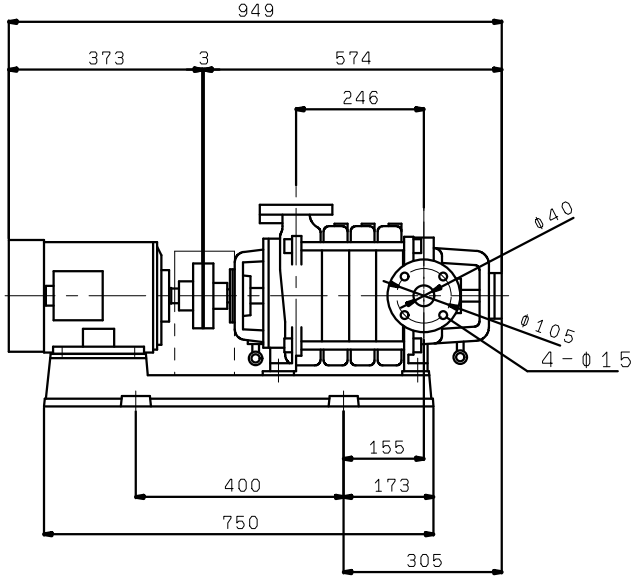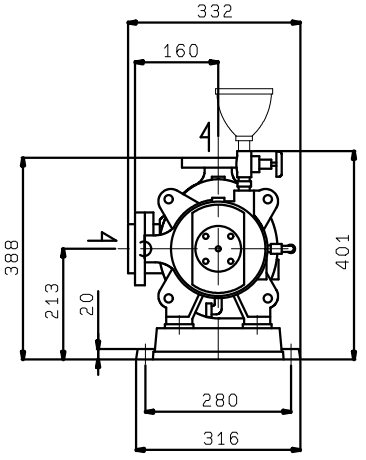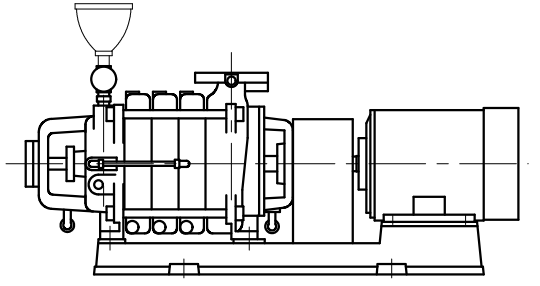T-R406X4ME3.7
(VC30)