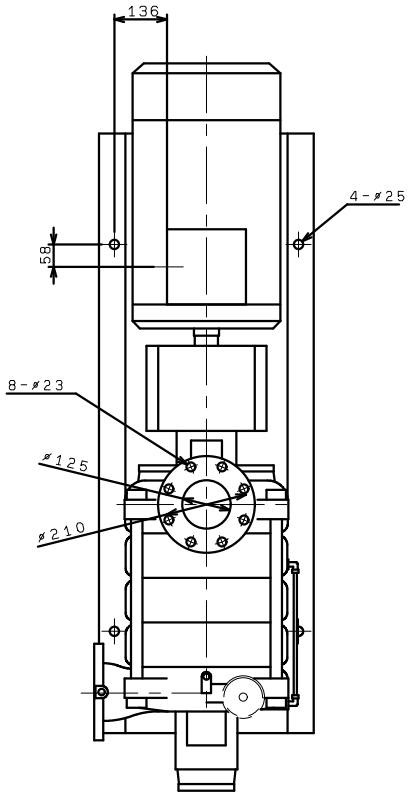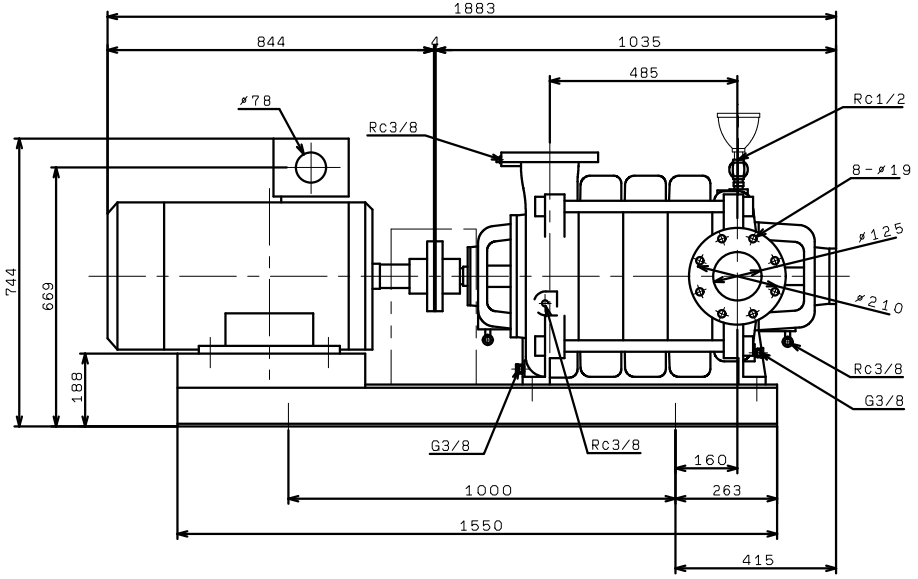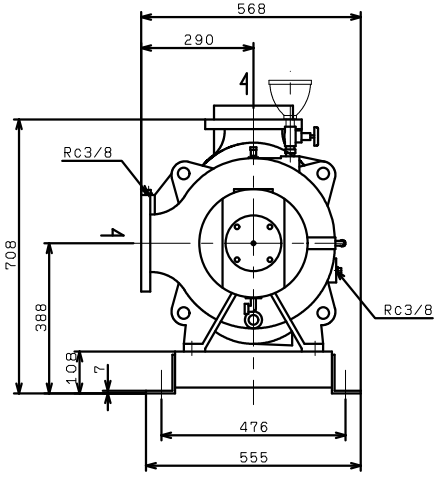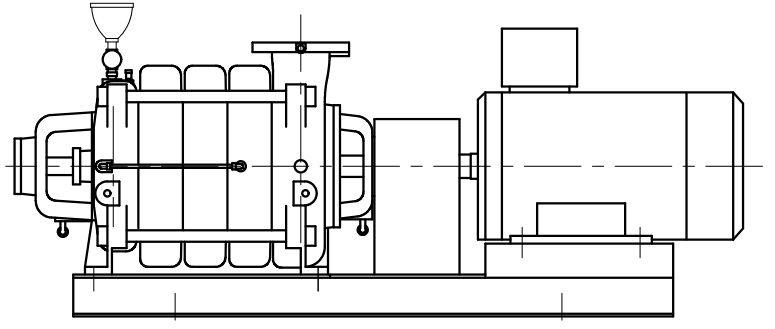T-R1255X4ME37