RCD-40B3.0
RCD-40B3.0T4
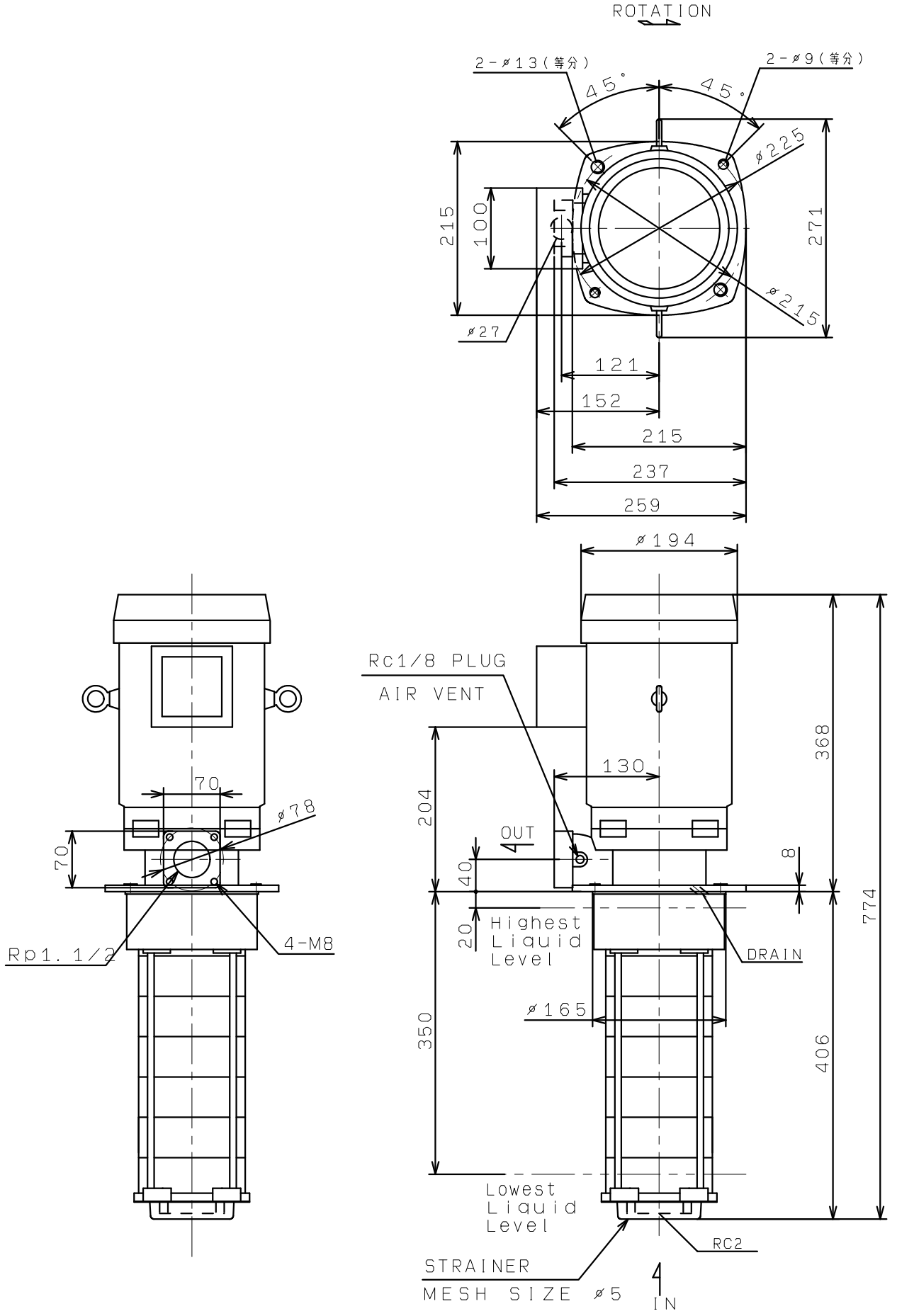
RCD-40BE3.0
RCD-40BE3.0T4
(VC80)