RCD-40B2.2
RCD-40B2.2T4
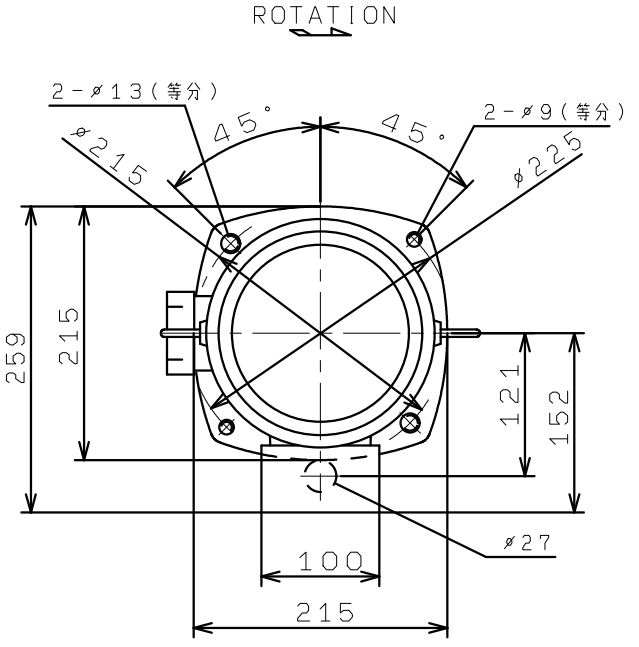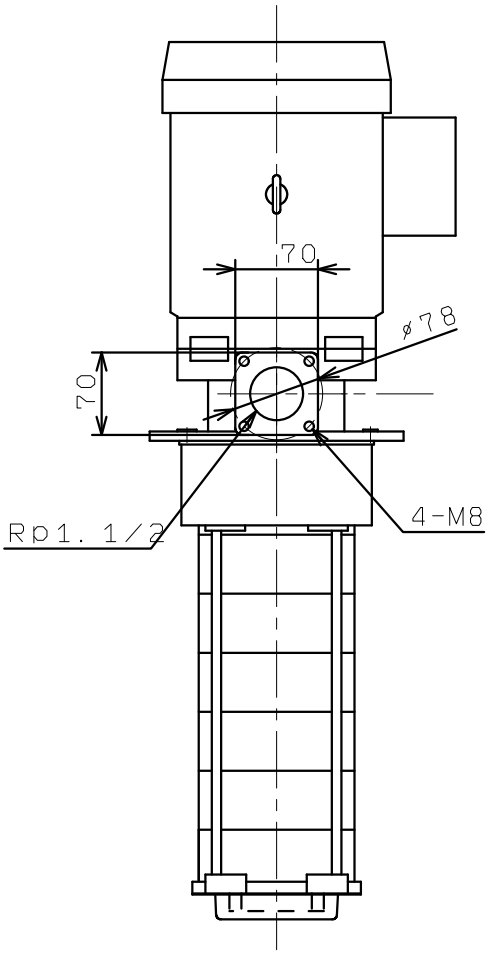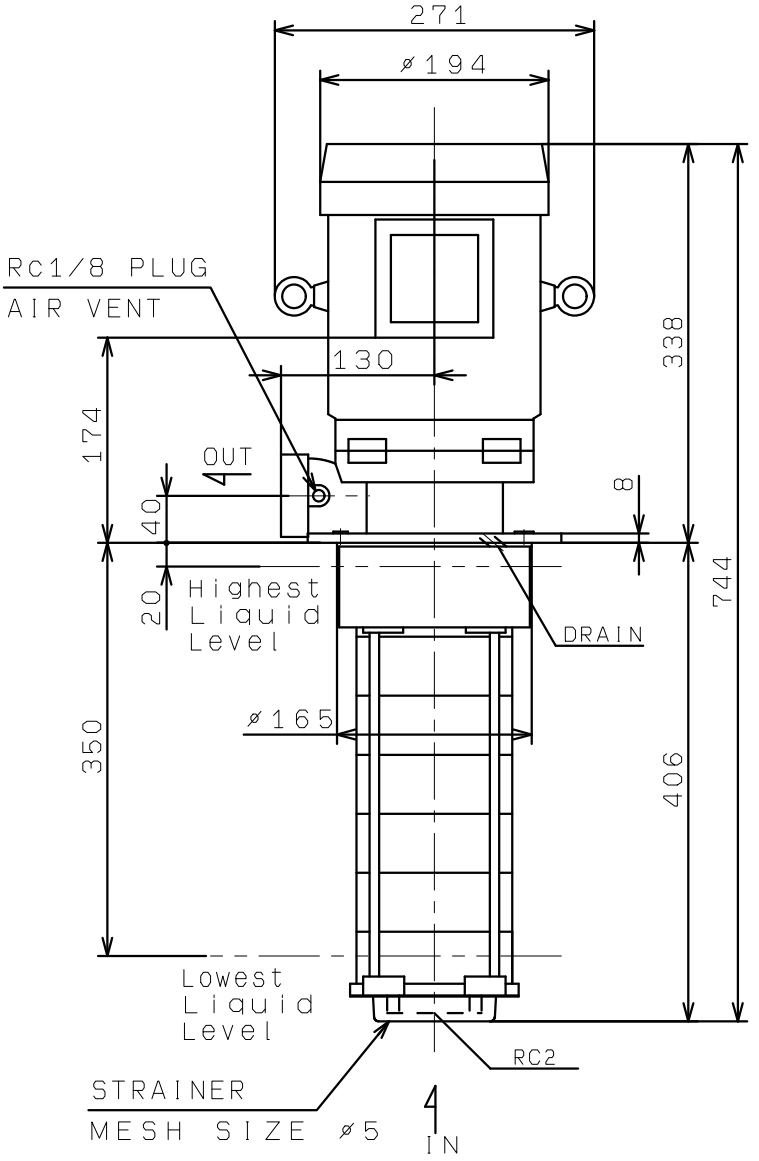
RCD-40BE2.2
RCD-40BE2.2T4