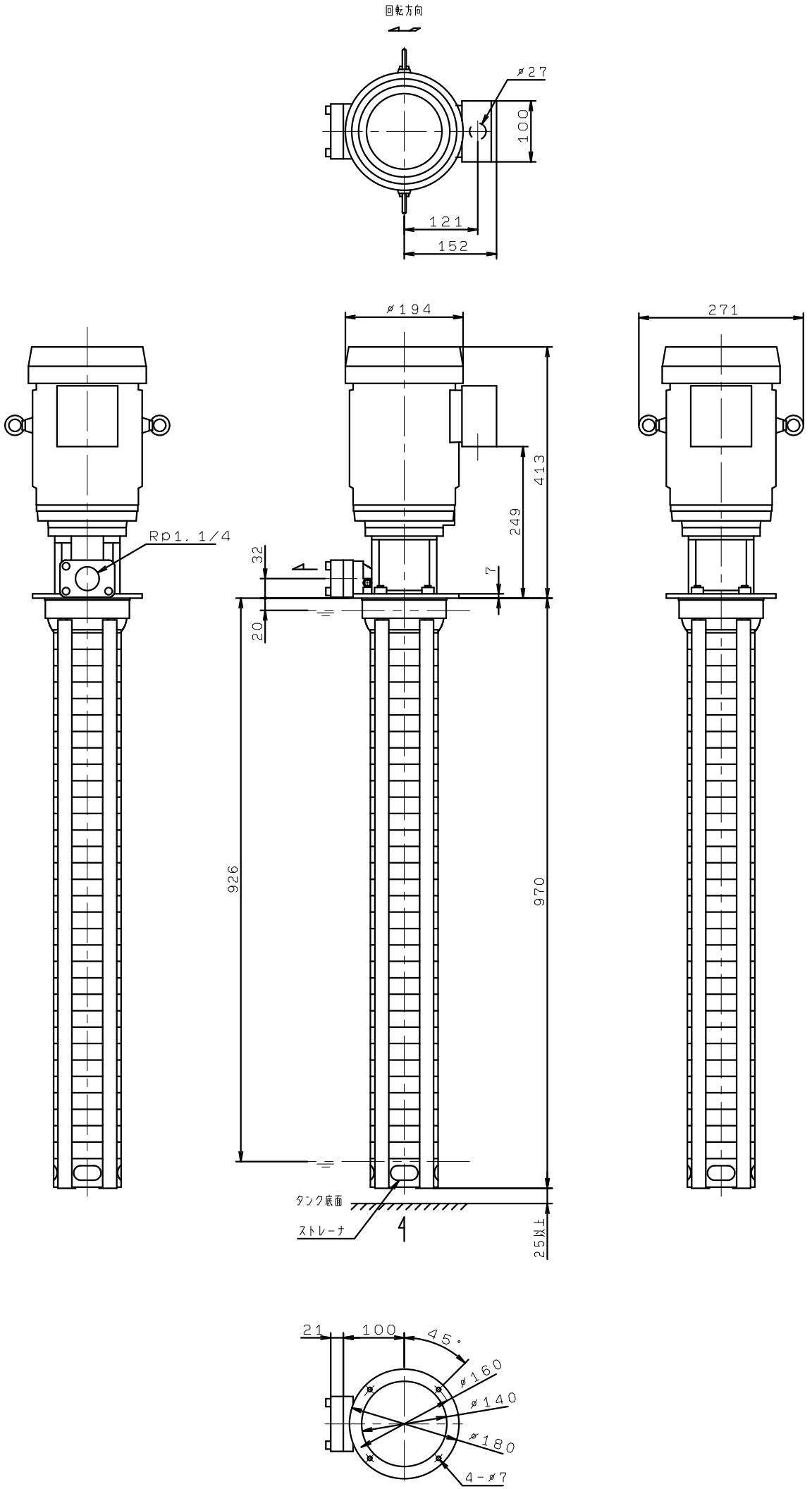RCC5-32/20F
RCC5-32/22F