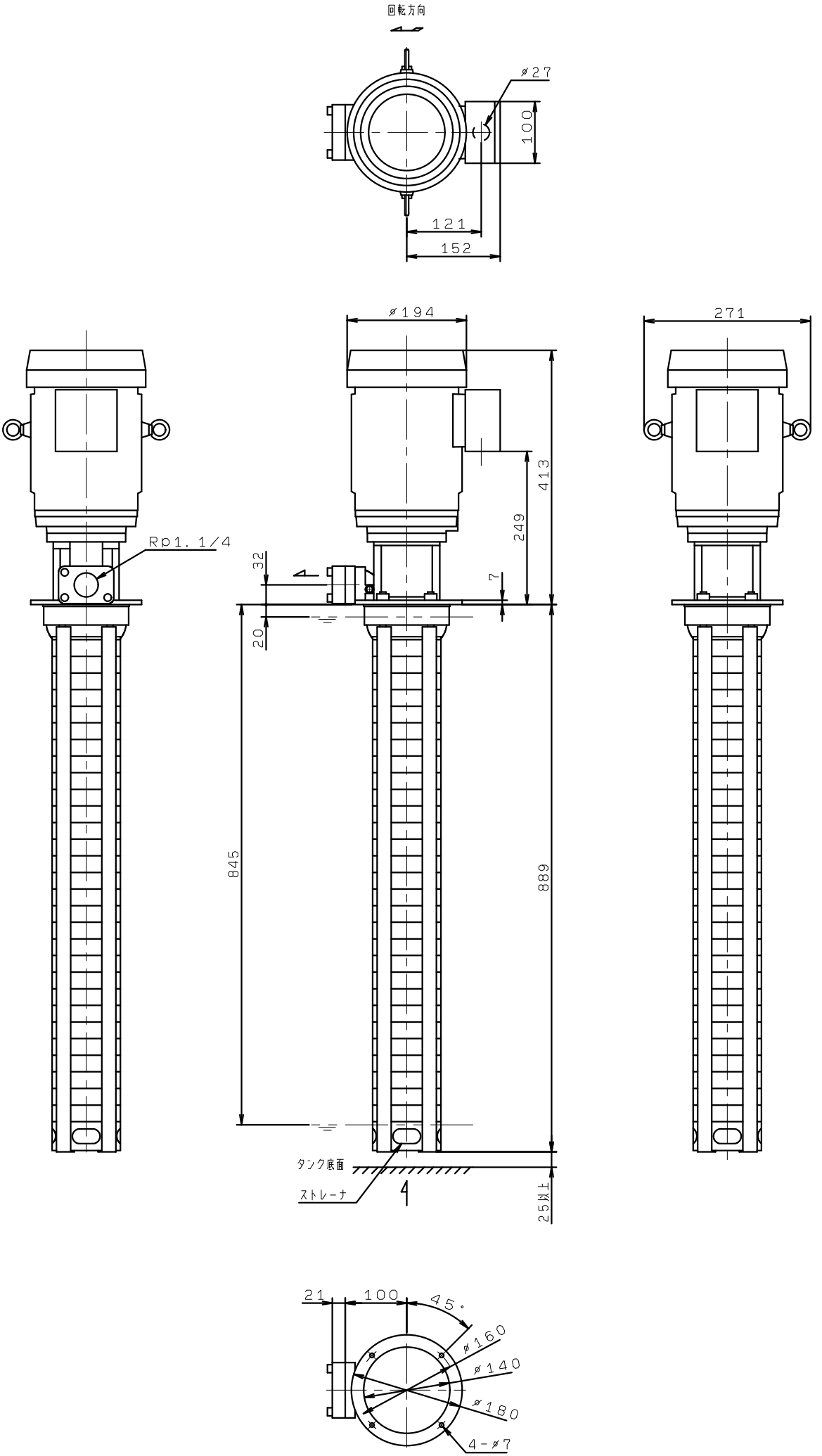RCC5-29/17F
RCC5-29/20F
RCC5-29/22F