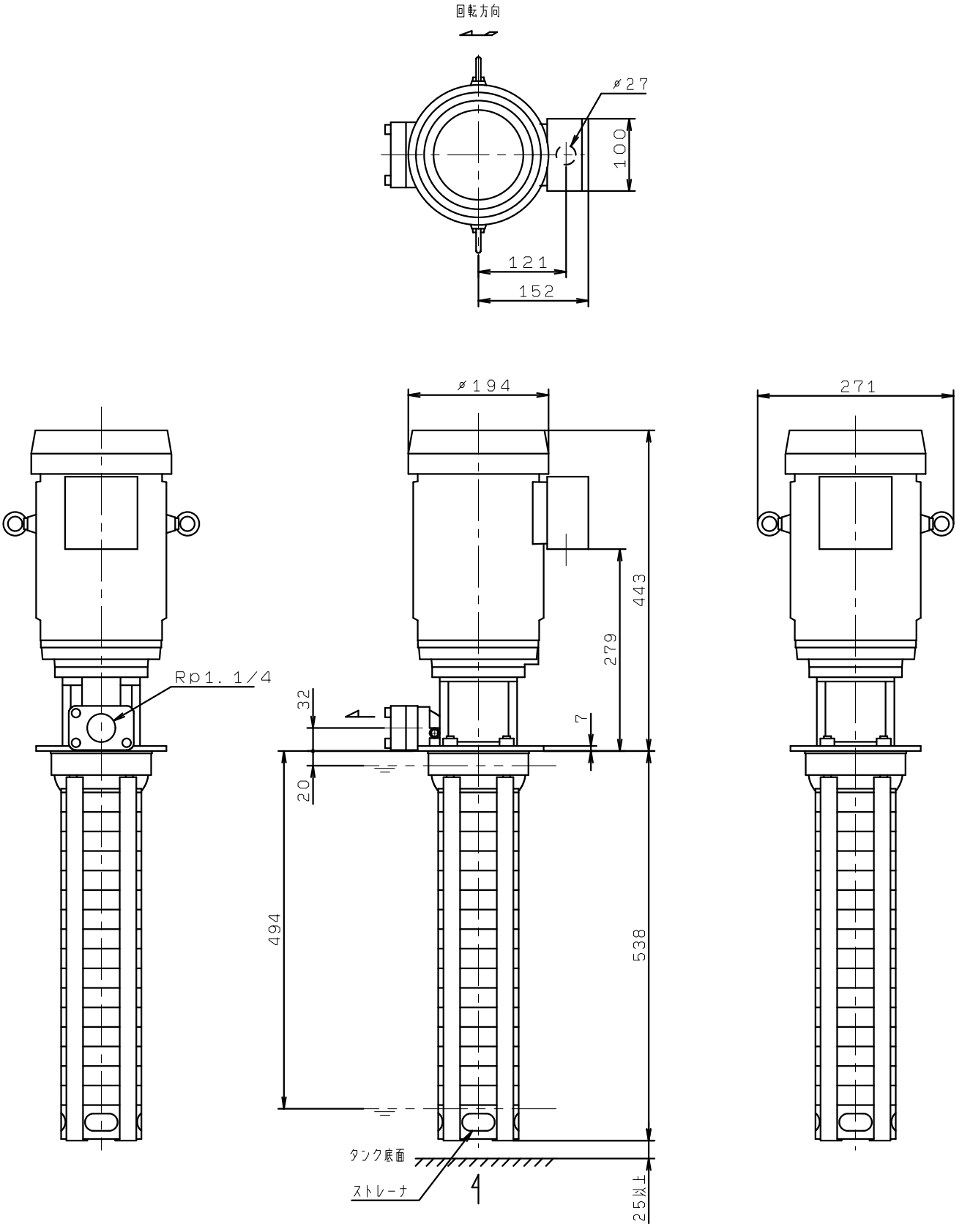RCC5-16/14
RCC5-16/15
RCC5-16/16