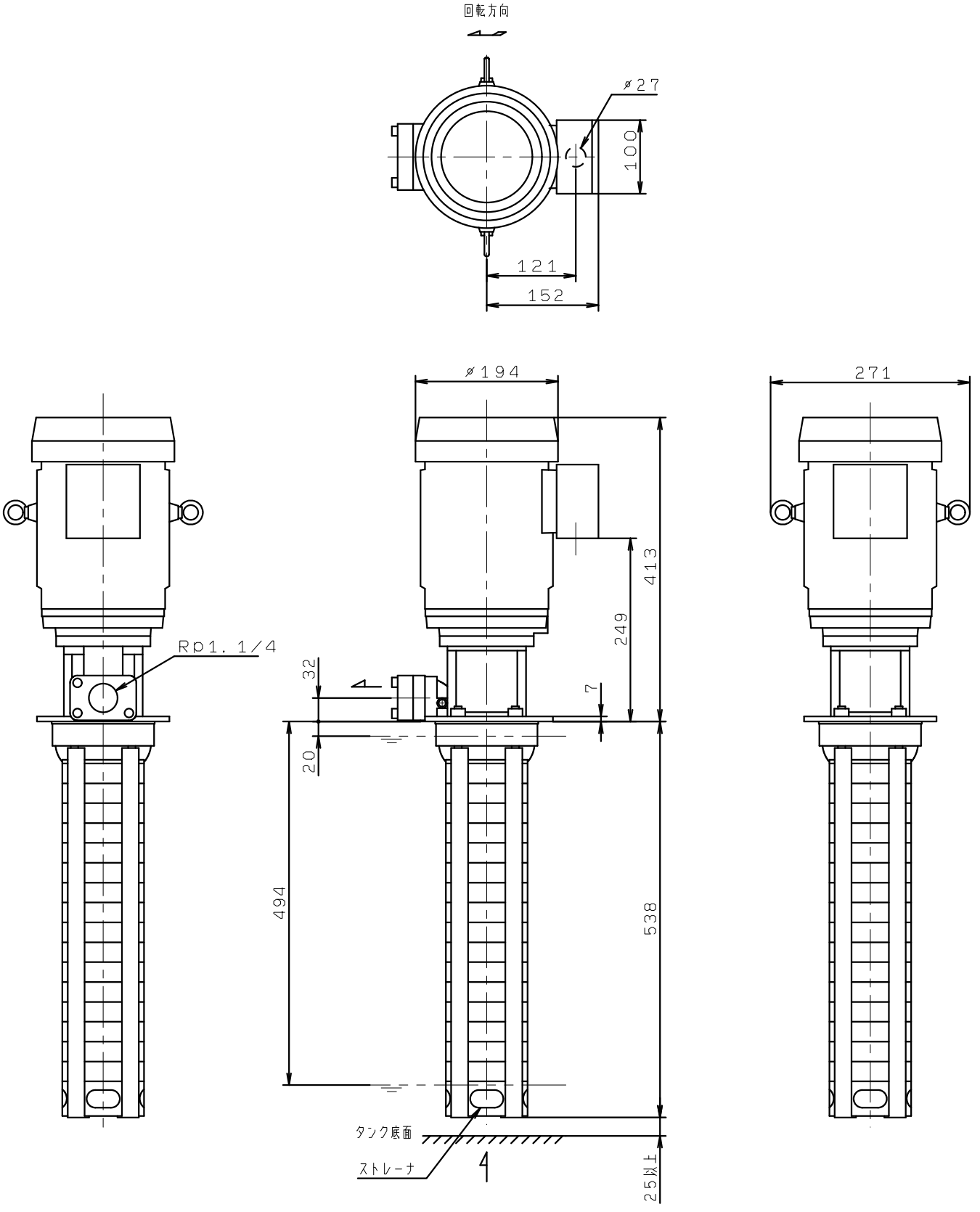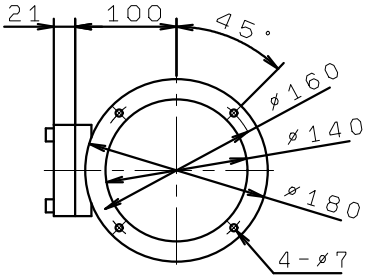RCC5-16/11
RCC5-16/12
RCC5-16/13