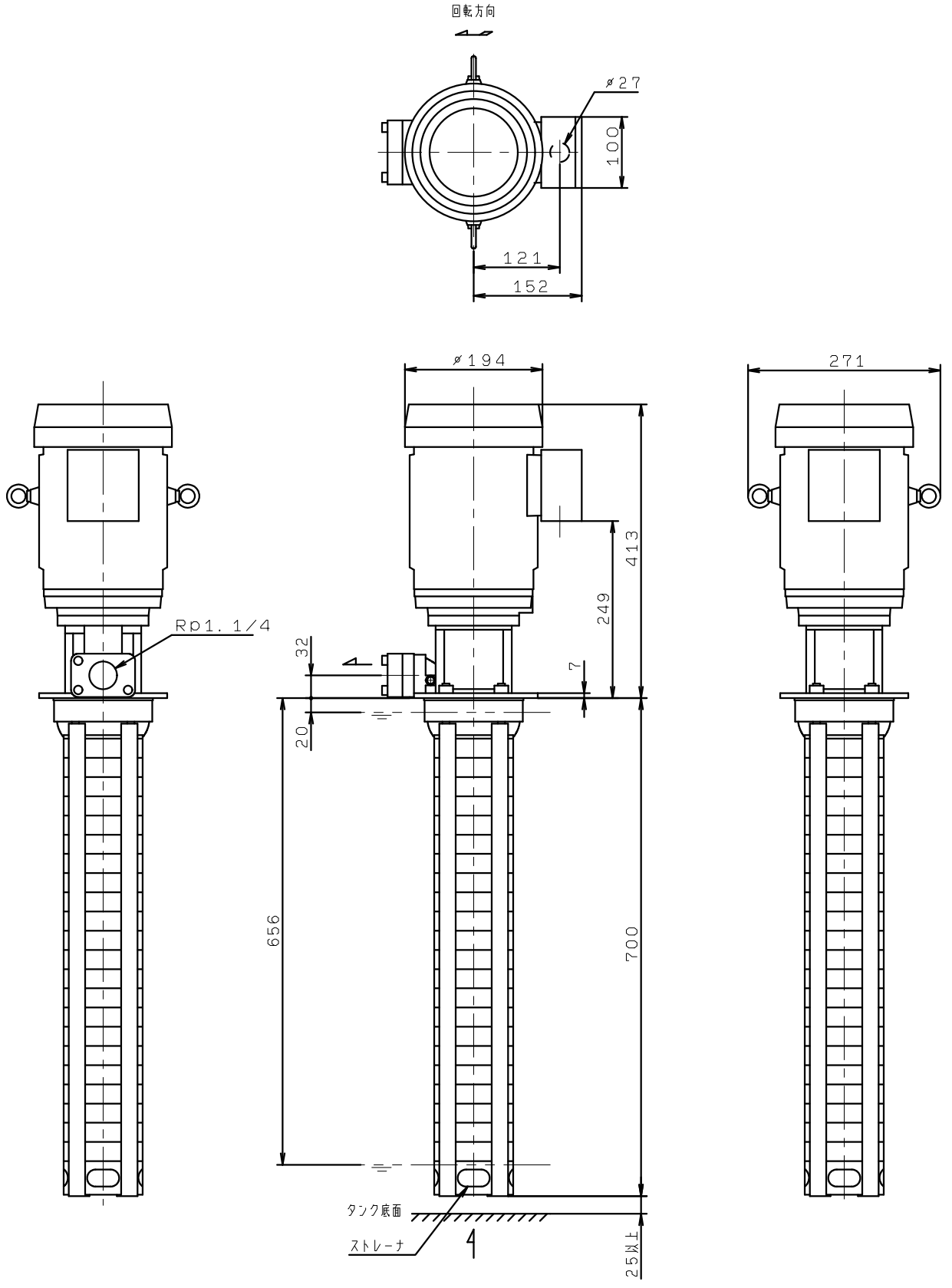RCC4-22/8
RCC4-22/10
RCC4-22/12F
RCC4-22/14F