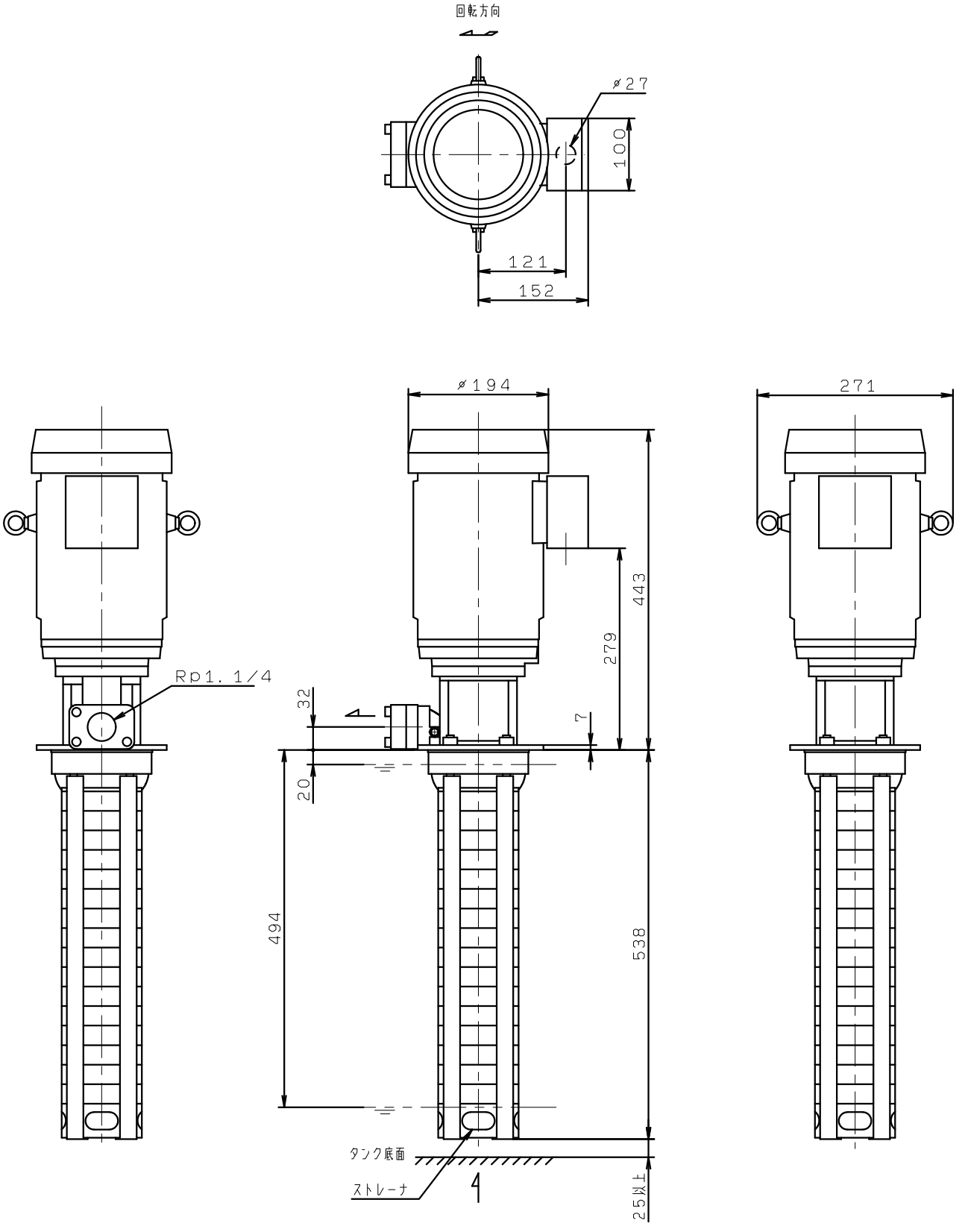RCC4-16/12
RCC4-16/13
RCC4-16/15
RCC4-16/16F