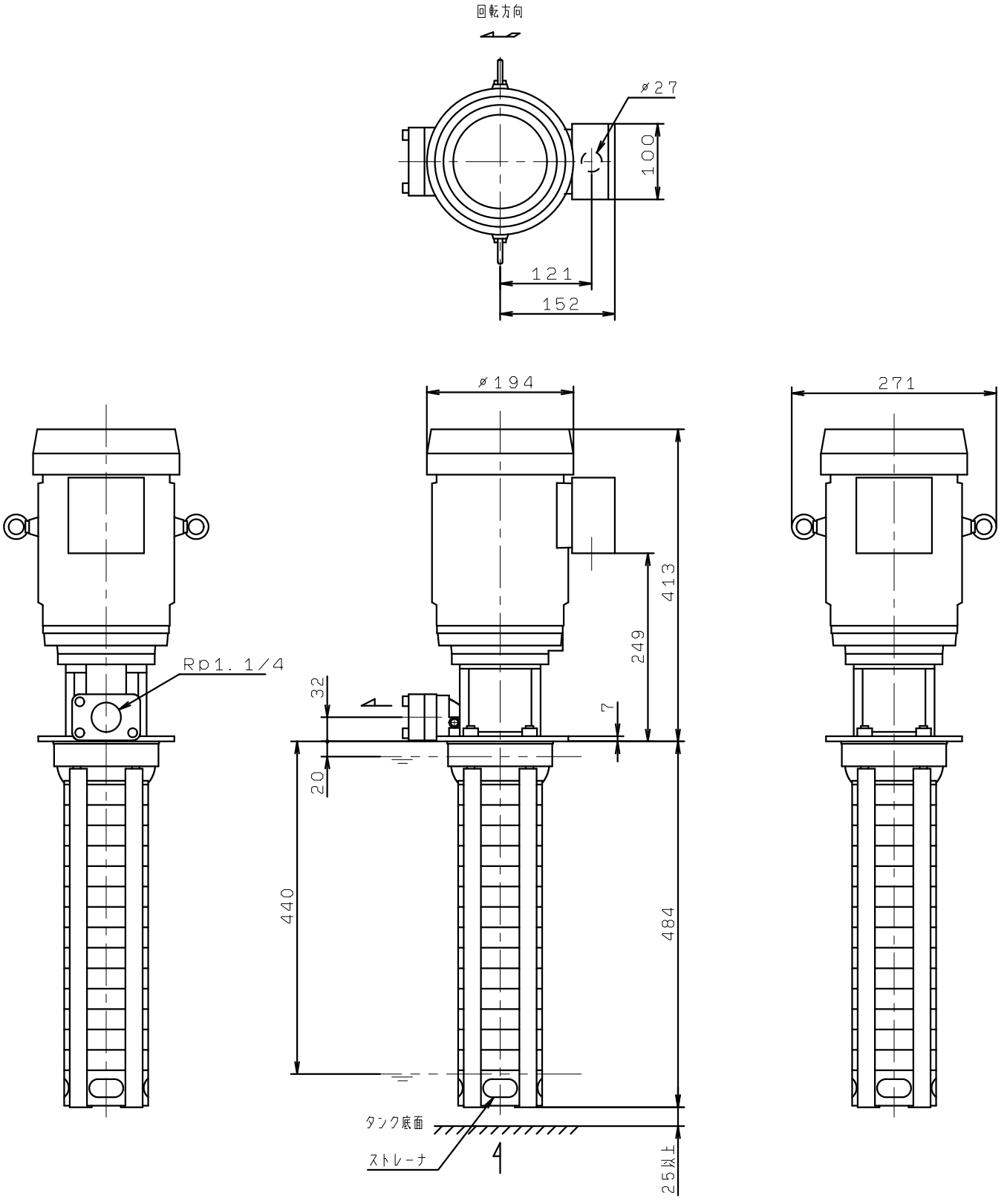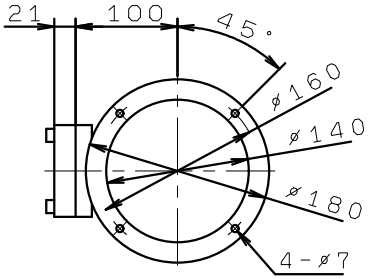RCC4-14/8
RCC4-14/10
RCC4-14/12F
RCC4-14/14F