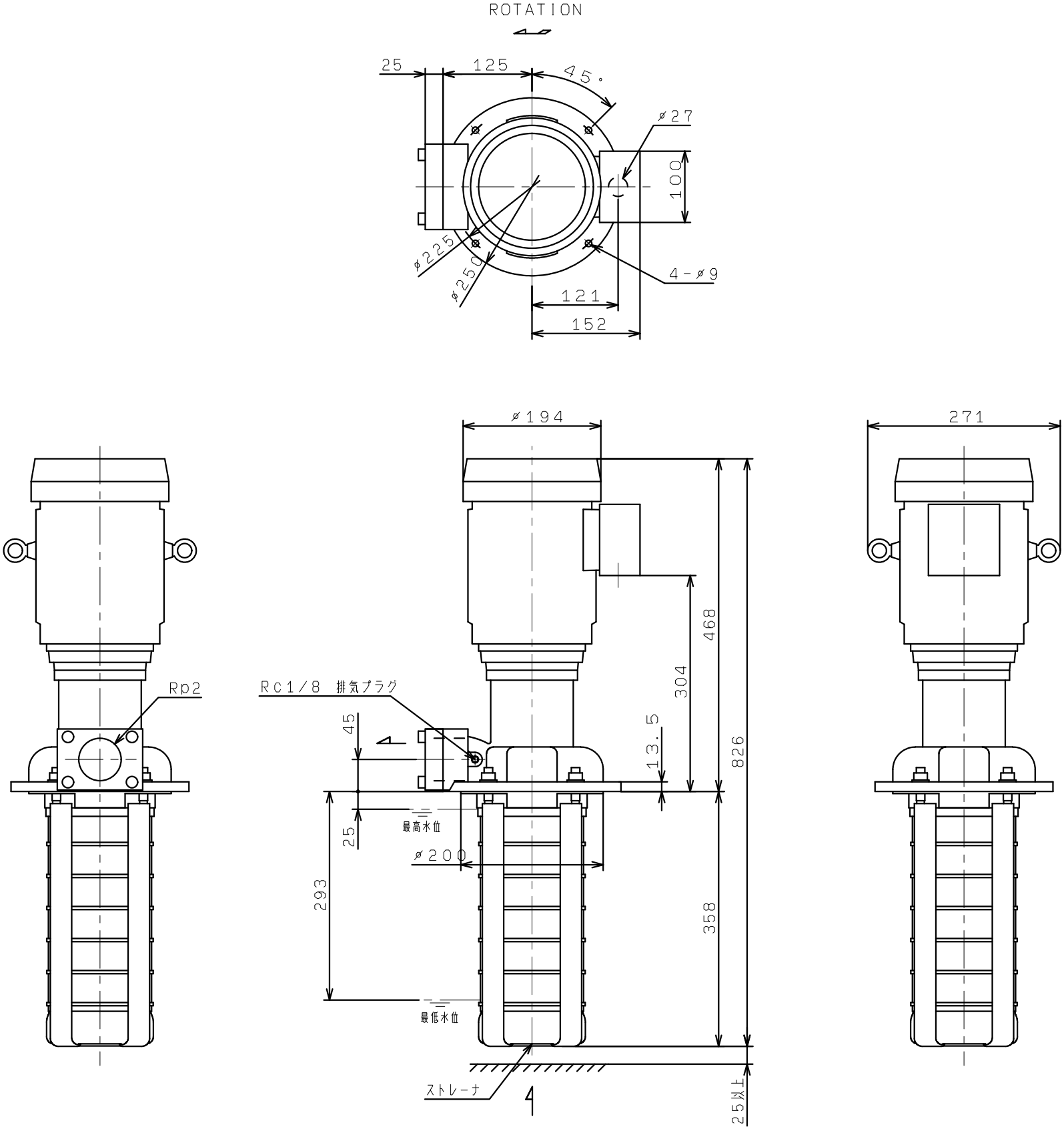RCC15-6/3F
RCC15-6/2