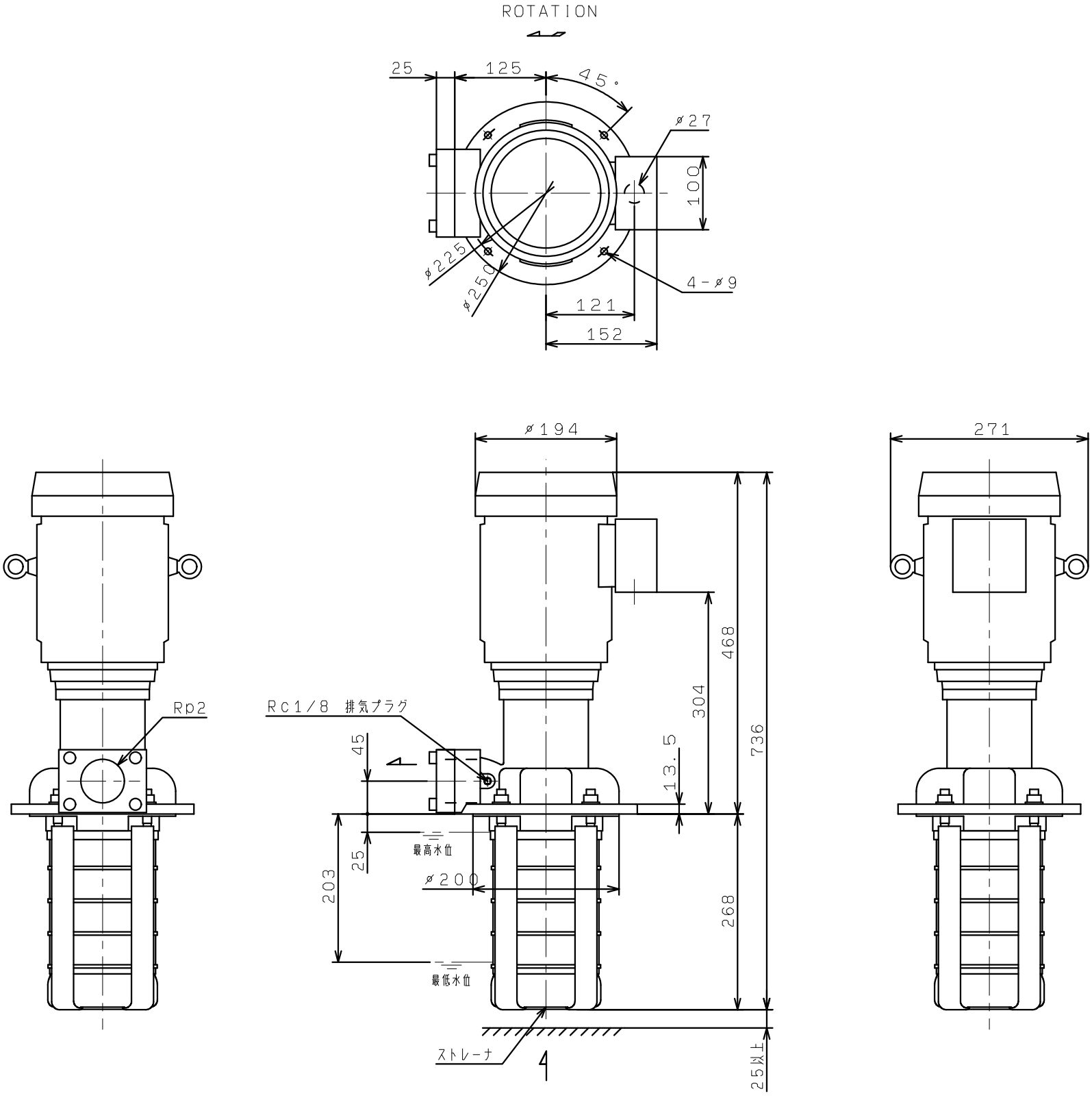RCC15-4/3F
RCC15-4/2