RCC15-4/2F
RCC15-4/1
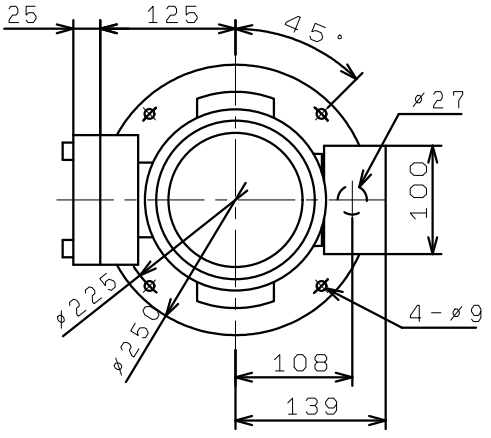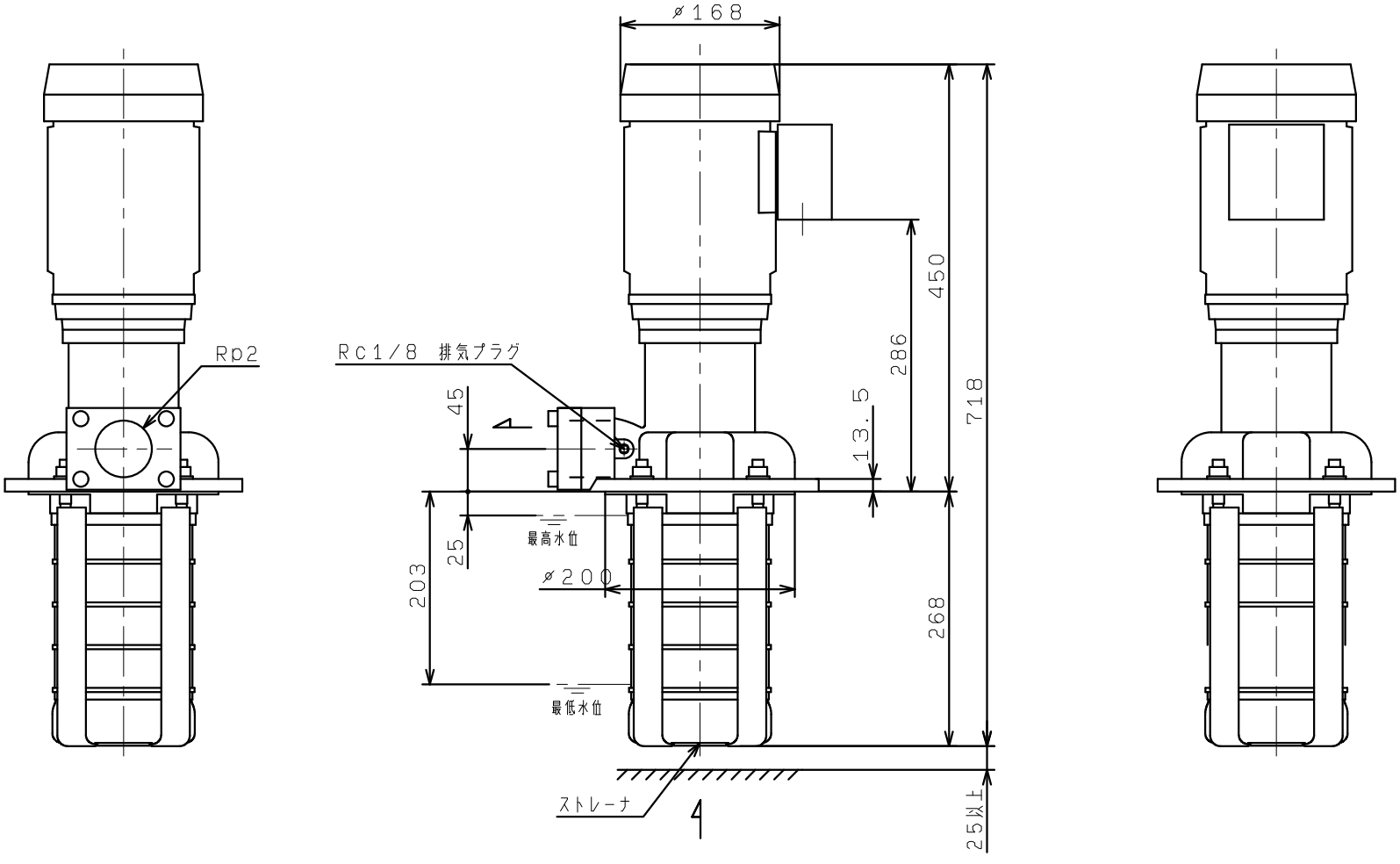
ROTATION