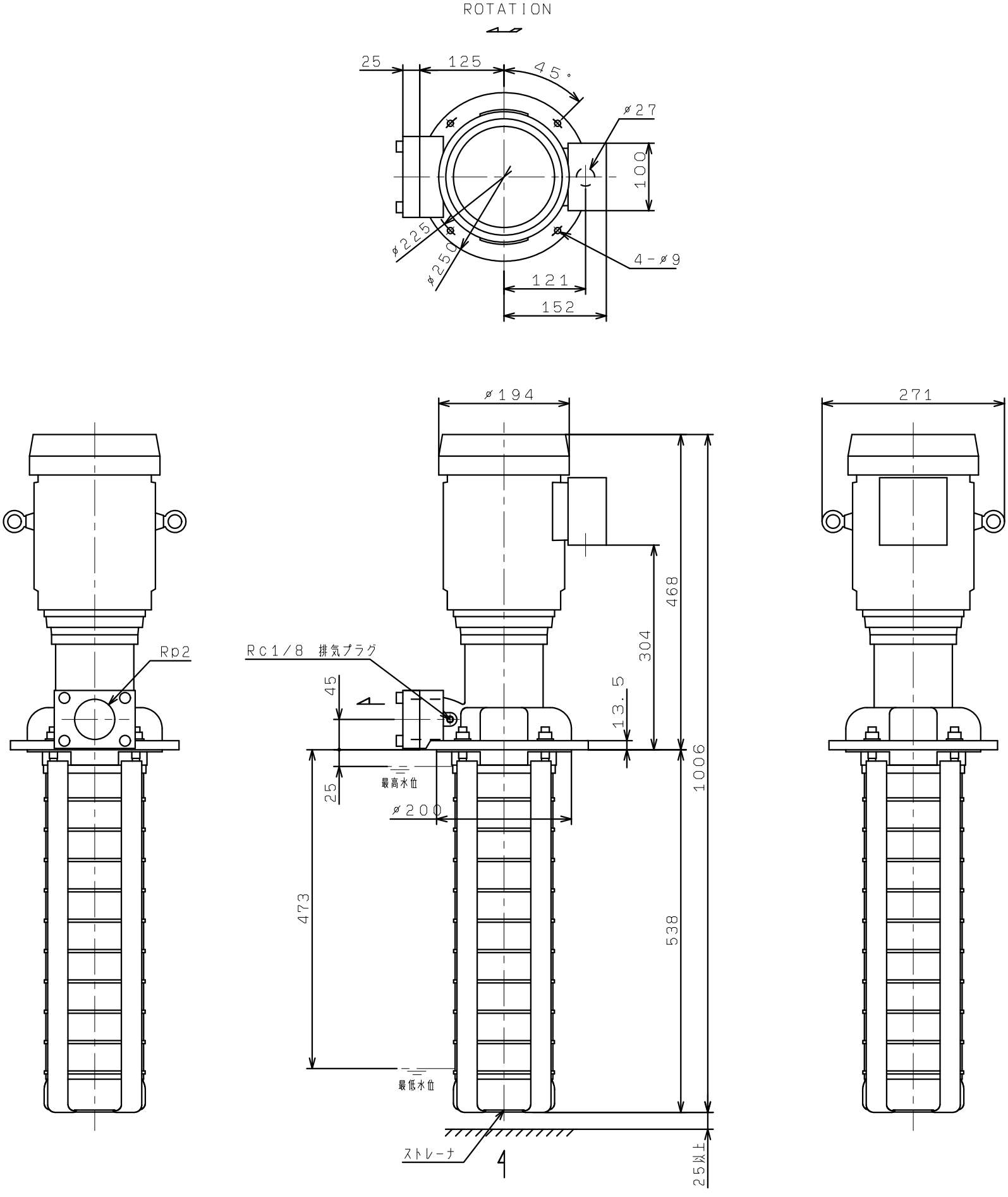RCC15-10/3F
RCC15-10/2