RCC10-20/4F
RCC10-20/5F
RCC10-20/2
RCC10-20/3
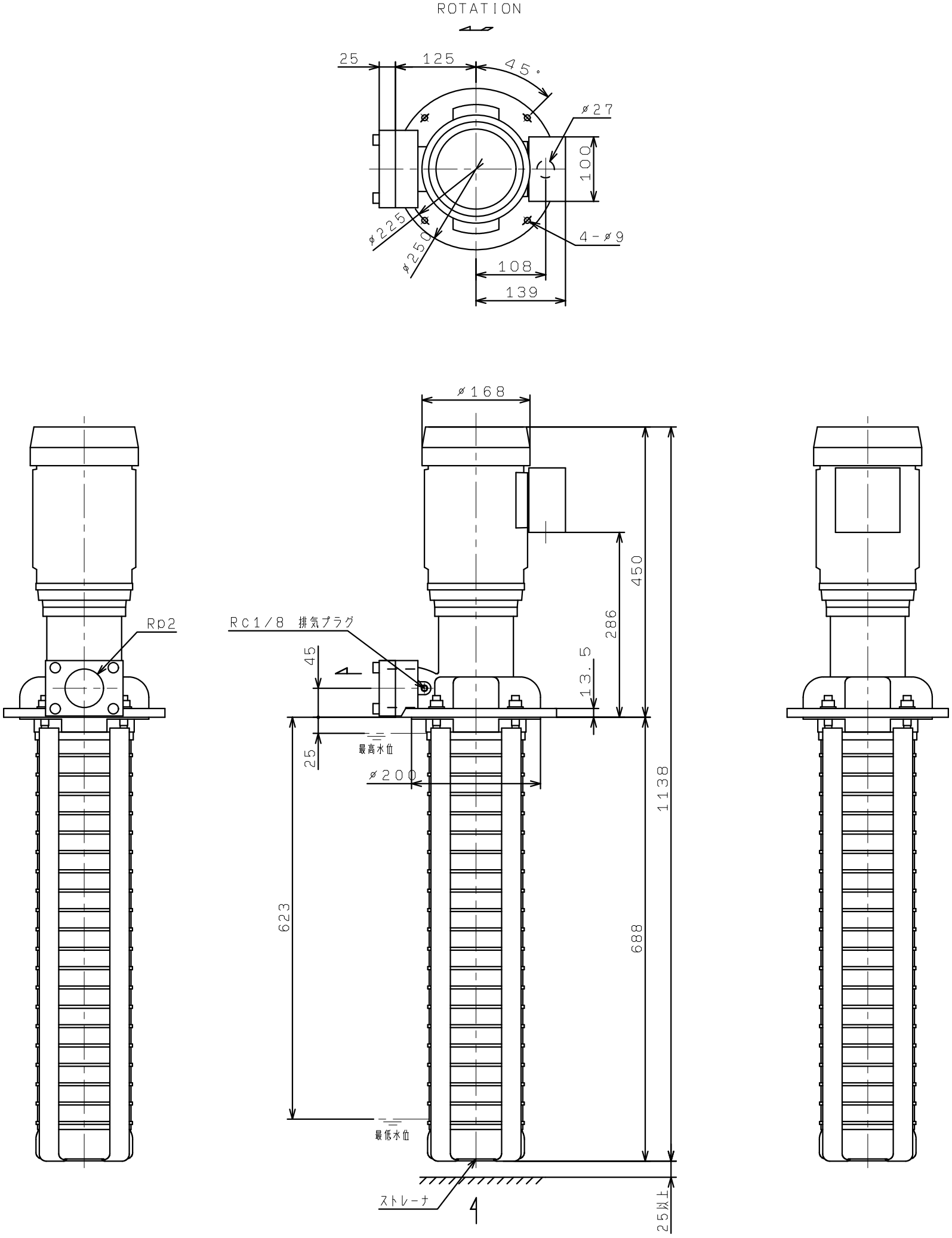
ROTATION